POWER SUPPLY UNIT FOR REFLECTED LIGHT FLUORESCENCE

MODEL BH2-RFL-T3

REPAIR MANUAL

OLYMPUS

CONTENTS

CONTENTS

1. NAME AND SYMBOL IN OLYMPUS

Name	POWER SUPPLY UNIT FOR MERCURY BURNER
CODE in OLYMPUS	BH2-RFL-T3

2. OUTLINE OF MERCHANDISE

This is a power supply designed to be combined with BH2-LSRF-2 FLUORESCENCE ILLUMINATOR for lighting a 100W MERCURY BURNER to be used for fluorescence observation with a REFLECTED LIGHT FLUORESCENCE MICROSCOPE.

3. FEATURES

1) Compact and light weight using a switching system.

Reference

	BH2-RFL-T2	BH2-RFL-T3
Width	240mm	120mm
Depth	355mm	290mm
Height	175mm	180mm
Weight	18.5kg	Approx. 4kg

2) Life meter indicates the lamp life (200 hours in average).

* When the power switch is turned on and the lamp is lit, the meter counts up 0.1 and thereafter counting up 0.1 at every 6 minutes while the lamp is lighting.

3) When the power switch is turned on, the ignition is automatically operated and the lamp can be lit.

4) The circuit system is not influenced by an input power supply, eliminating the necessity of switching power supply frequency (50/60Hz) and voltage (100V/110V/120V or 220V/240V).

- 100V type: Usable in a range of 100 ~ 120V ± 10%, 50/60Hz
- 200V type: Usable in a range of 220 ~ 240V ± 10%, 50/60Hz

4. RESTRICTED CONDITIONS

1) USHIO USH-102D mercury lamp is only applicable.

2) Wait at least 3 minutes before lighting again the lamp again once turning it off.

3) Avoid turning off the lamp for about 15 minutes after lighting up.

* Conditions 2) and 3) are not caused by the power supply. It is the problem of the mercury lamp itself. The lamp life may be reduced or the lamp may become difficult to light up again.

4) AC plug socket capacity should be 5A or larger. (Do not put many loads on one electrical outlet.)

5) The unit is compact and air cooled. Do not block the slit for cooling.

* It is desirable to have a 10cm space around the unit when installing it. If the unit is overheated, the protector functions and the power supply unit stops operation.

6) High voltage part is included inside. Protect the unit from being condensation and splashed with water.

- Operating temperature: 0 ~ 40°C
- Operating humidity: 30 ~ 80% (No condensation)
- Storing temperature: -25 ~ +75°C
- Storing humidity: 20 ~ 80% (No condensation)

7) Replacement of the fuse by the user is prohibited for safety.

* The fuse is located on the PCB in the unit.
A high voltage generating part is included, and dangerous. Disassembly and repairs except by a qualified serviceman is prohibited.

8) Use a 3-core cord for power supply, and make grounding for safety.

5. SPECIFICATIONS

Item		Specifications	Remarks
1	Input power supply voltage	100V type: 100 ~ 120V continuous 200V type: 220 ~ 240V continuous	Commercial power supply(AC)
2	Input current	100V type: 2.8A max. (AC100V) 200V type: 1.8A max. (AC220V)	
3	Power supply frequency	50 ~ 60Hz continuous	
4	Connecting device	Power supply input connector (3-core) Lamp house connection connector (5-core)	Compatible with BH2-RFL-T2
5	Lamp life judgment	Life meter with reset function	4-digit display (000.0 ~ 999.9) Min. digit 0.1 = 6 min.
6	Applicable mercury lamp	USHIO·USH-102D	
7	Power switch	OMURON · A8A-213-1 (100V) · A8A-223-1 (200V)	Seesaw type Green cap Neon illumination type
8	Dimensions	Width: 120mm Depth: 290mm Height: 170mm	Projections not included
9	Weight	· 100V type: 3.8kg ± 10% · 200V type: 3.9kg ± 10%	Except 0.9kg ± 0% of packing material

6. FRONT PANEL DISPLAY

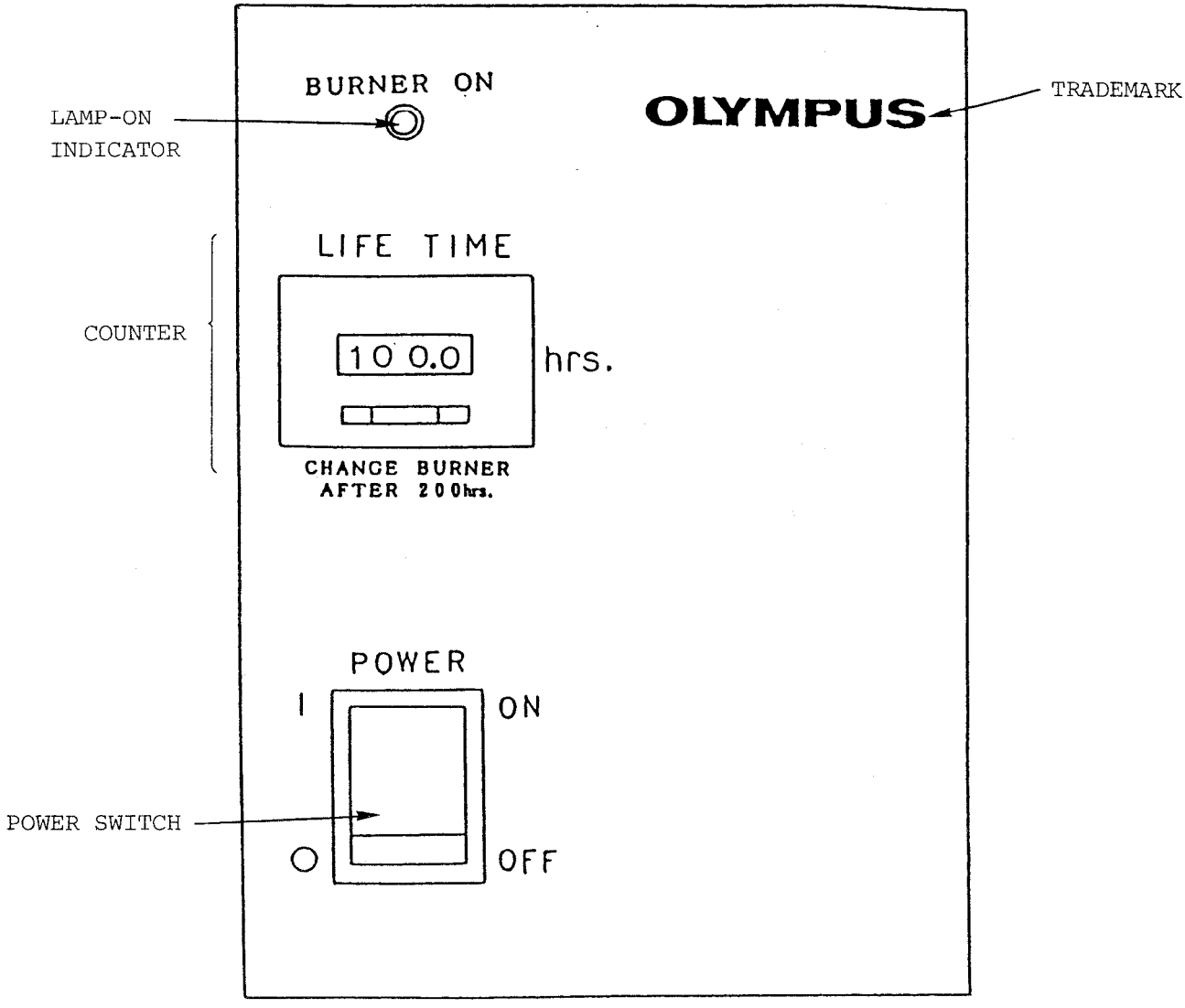

7. REAR PANEL DISPLAY

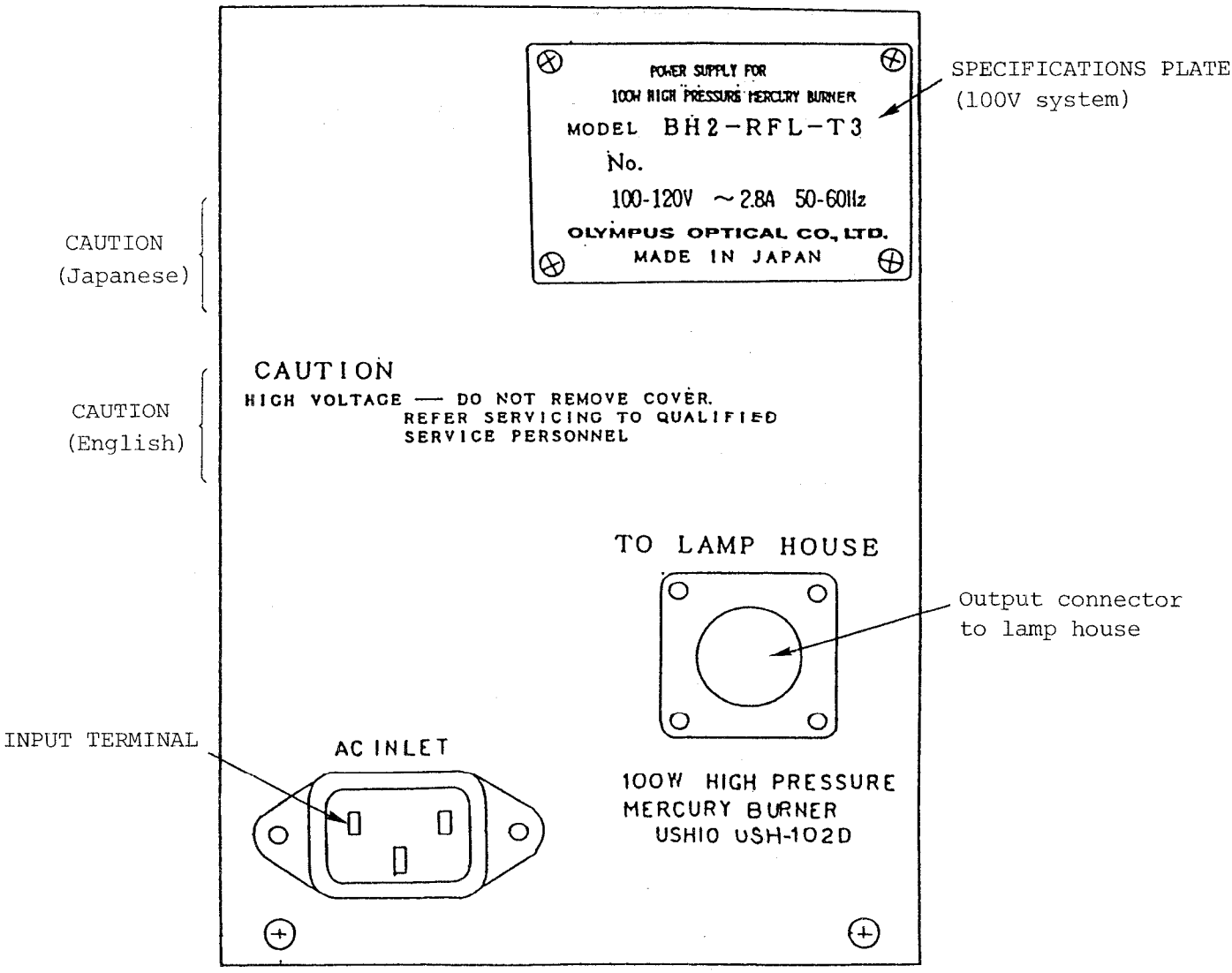

CONTENTS

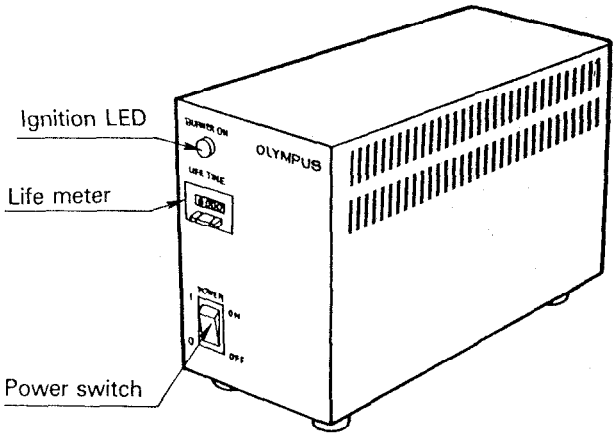

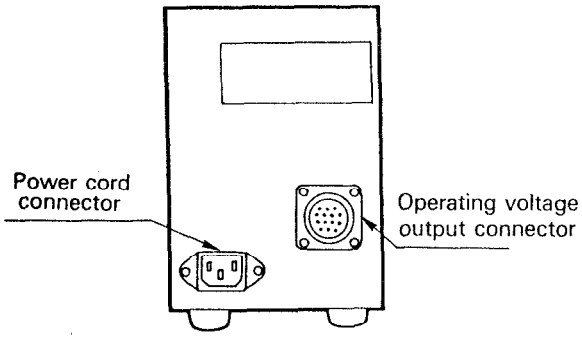

1. DISASSEMBLY OF INLET-ASS'Y

1-1 Remove the cover.

SCREW ① CTK3x6SA 10 pcs.

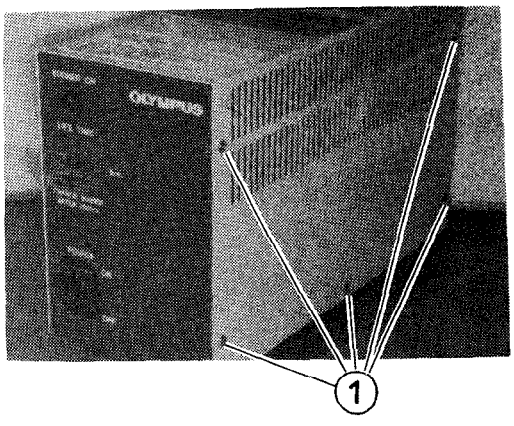

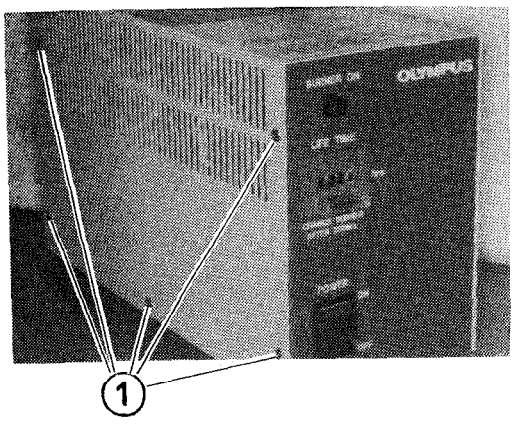

1-2 Disconnect the CONNECTOR (CNA) ③ from the POWER-PCB ②, and disconnect the EARTH-CABLE by removing the SCREW ④ from the bottom.

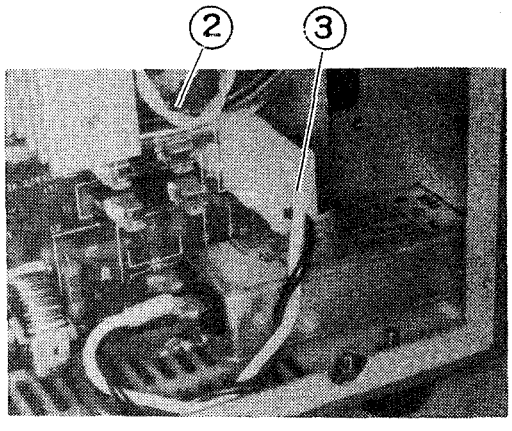

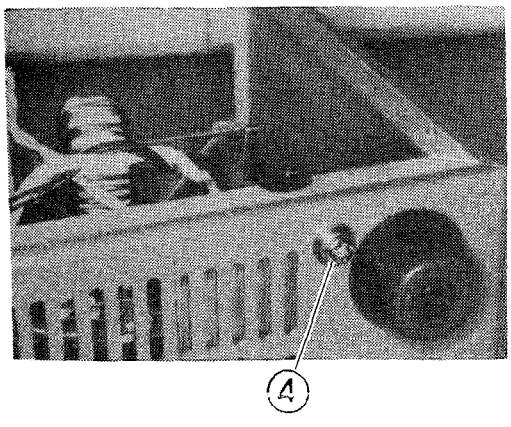

1-3 Remove the INLET-ASS'Y ①.

SCREW ② INLET-ASS'Y (for 100V) = CTK3x6SA 2 pcs.
INLET-ASS'Y (for 200V) = CQK3x8SA 2 pcs.

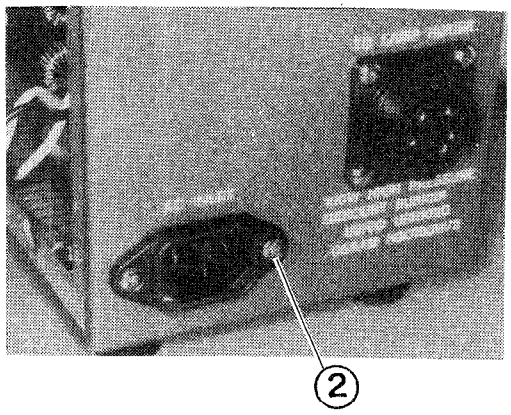

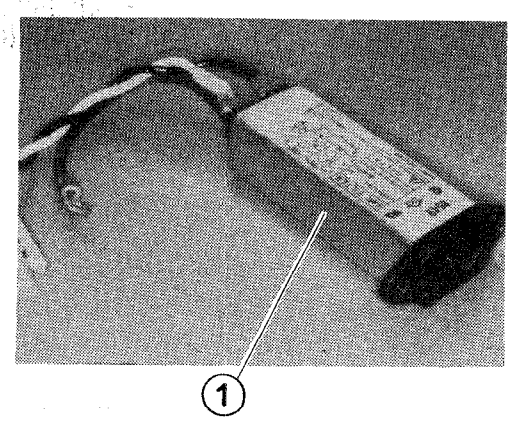

2. DISASSEMBLY OF POWER-PCB

2-1 Remove the CONNECTOR ③ (CNB, CND, CNE, CNF) and the SCREWs ④ and ⑤ of TERMINAL-BLOCKs TL1 and TL2 from the PCB.

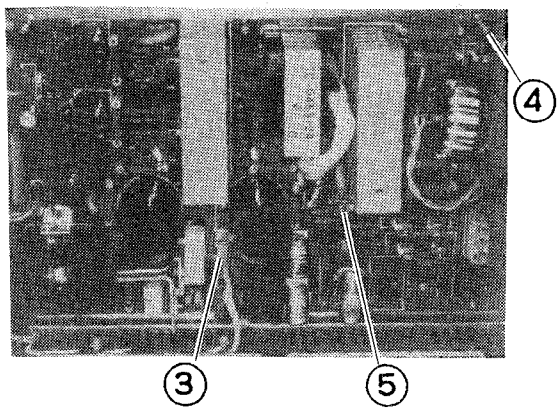

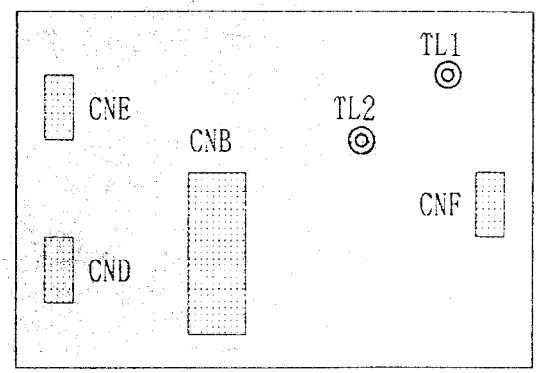

POWER-PCB

2-2 Remove the POWER-PCB.

SCREW ① ~ ⑤ CUKSK3x20SA 5 pcs.
⑥ ~ ⑦ CUKSB3x6SA 2 pcs.

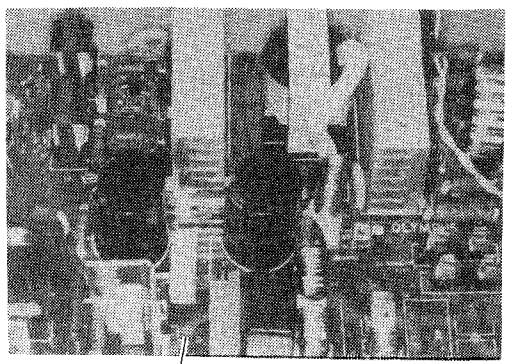

POWER-PCB

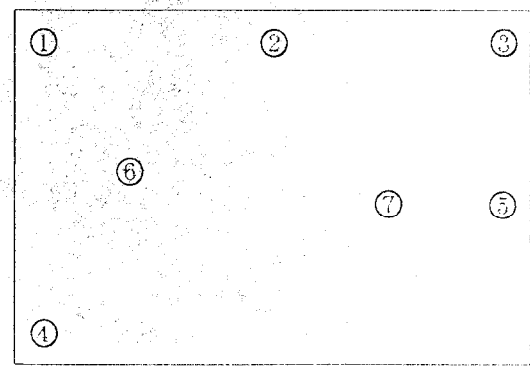

POWER-PCB

3. DISASSEMBLY OF CONTROL-PCB

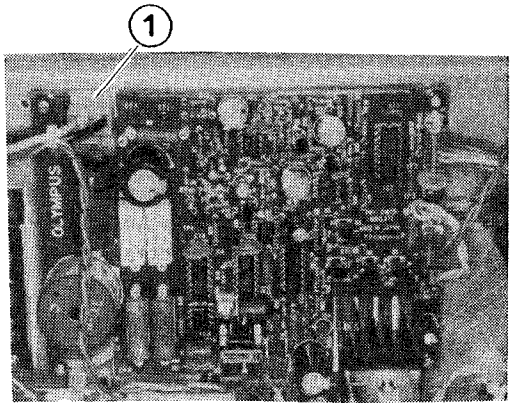

3-1 Disconnect the CONNECTOR ① (7 pcs.) from the PCB as listed below.

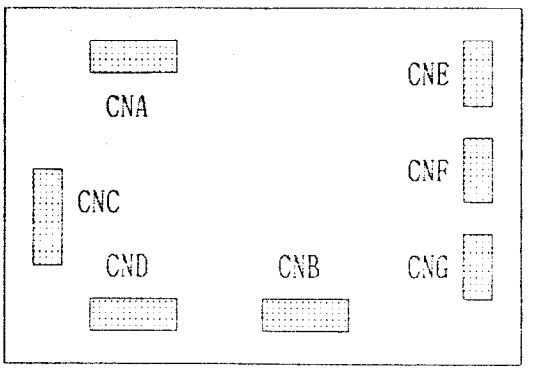

CONTROL-PCB

3-2 Remove the CONTROL-PCB.

SCREW ② CUKSKx3x20SA 4 pcs.

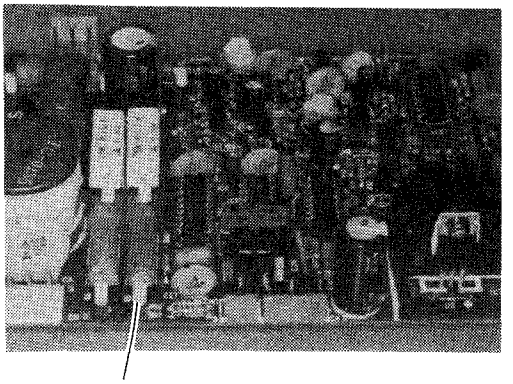

CONTROL-PCB

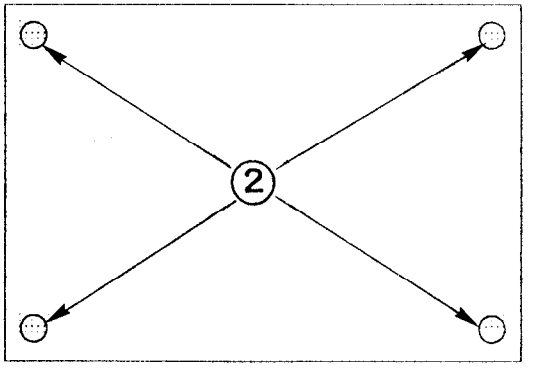

CONTROL-PCB

4. DISASSEMBLY OF IGNITION-PCB

4-1 Remove the CONNECTOR ③ (CNB, CNA) and the SCREW ④ of TL1 TERMINAL-BLOCK from the PCB.
Disconnect the EARTH-CABLE ⑤ extending from the PCB.

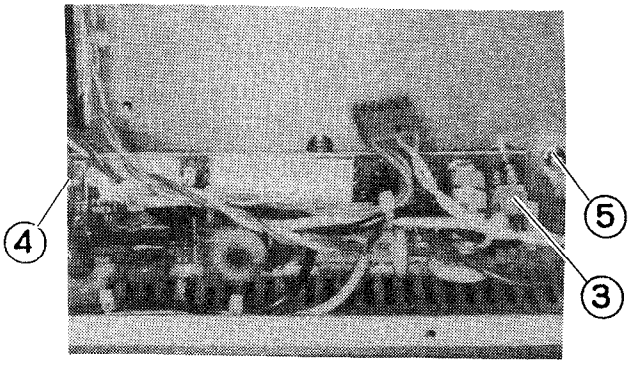

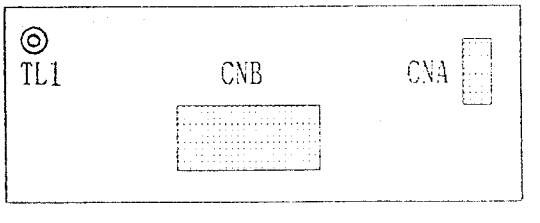

IGNITION-PCB

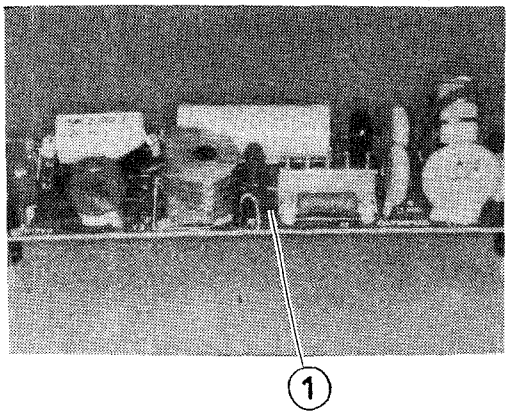

4-2 Remove the IGNITION-PCB (1).

SCREW (2) CUKSK3x20SA 3 pcs.

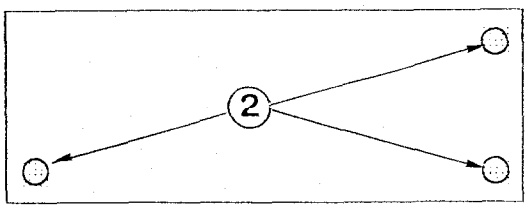

5. DISASSEMBLY OF OUTLET-ASS'Y

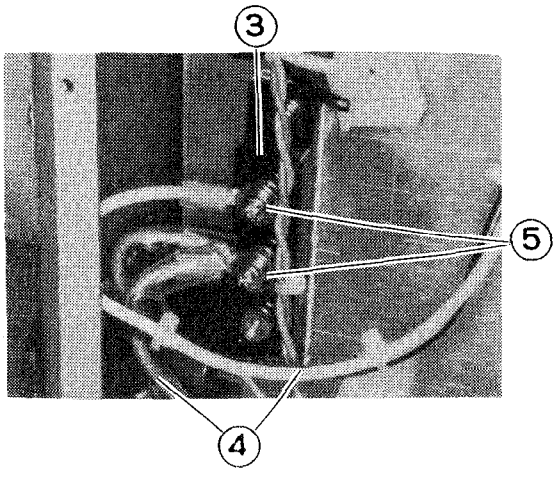

5-1 Disconnect the CORD (4) (1 orange and 2 red cords) from the DIODE 3 .

SCREW (5) CUKSB3x6SA 2 pcs.

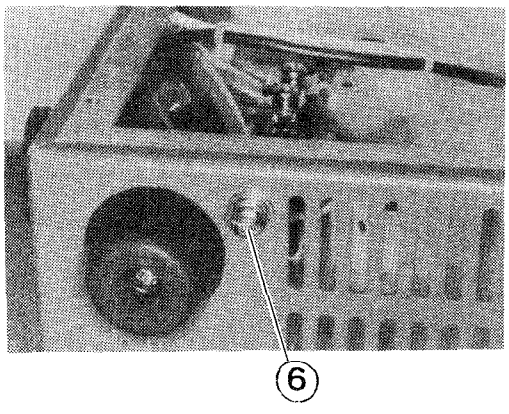

5-2 Remove the SCREW (6) on the bottom, and disconnect the EARTH-CABLE.

5-3 Remove the OUTLET-ASS'Y ①.
SCREW ② CTK3x6SA 4 pcs.

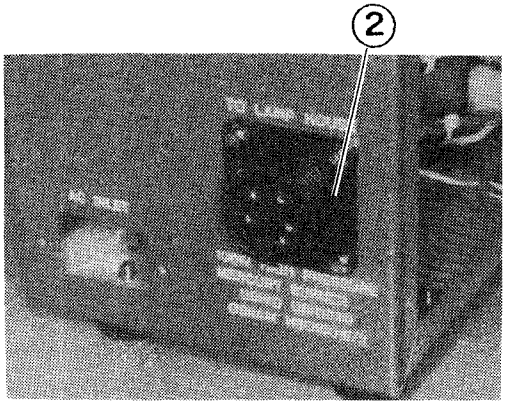

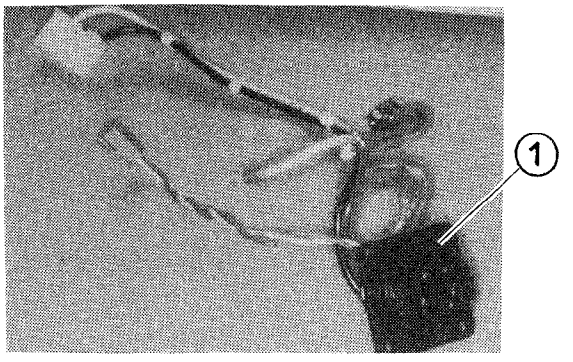

6. DISASSEMBLY OF LED-ASS'Y

6-1 Remove the NUT ③ and take off the LED-ASS'Y ④.

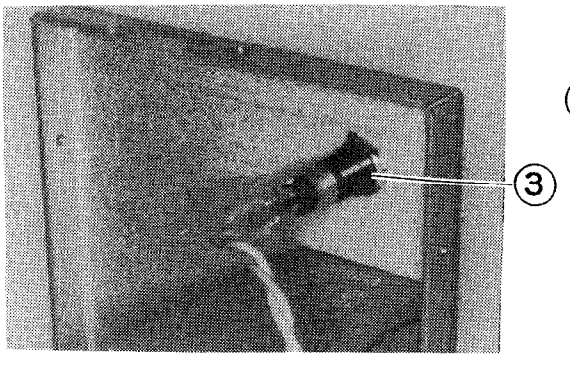

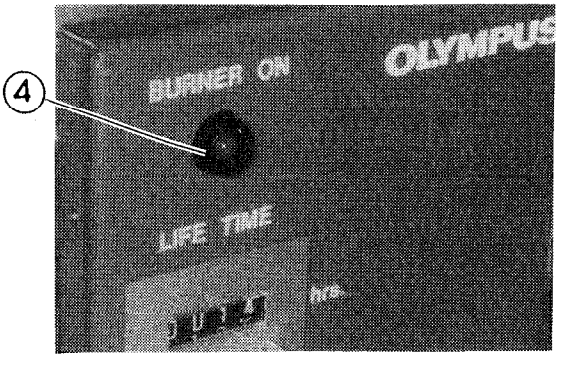

7. DISASSEMBLY OF COUNTER-ASS'Y

7-1 Remove the SPRING ⑤ fastening the counter.

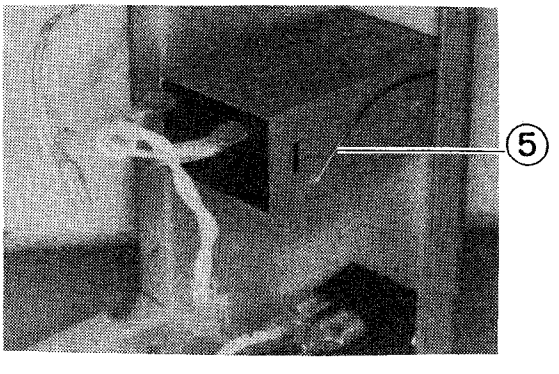

7-2 Remove the COUNTER-ASS'Y ①.

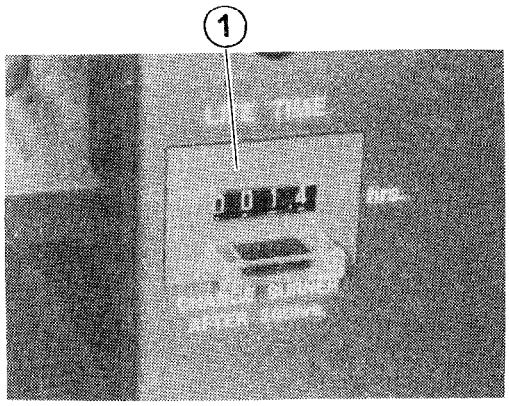

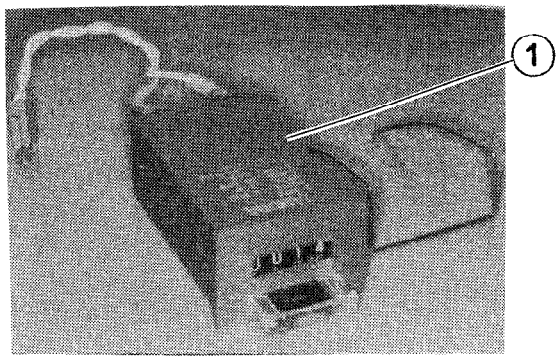

8. DISASSEMBLY OF MAIN-SW

8-1 Push the CLAW ③ (4 locations) of the MAIN-SW ②, and remove the MAIN-SW ② from the front panel.

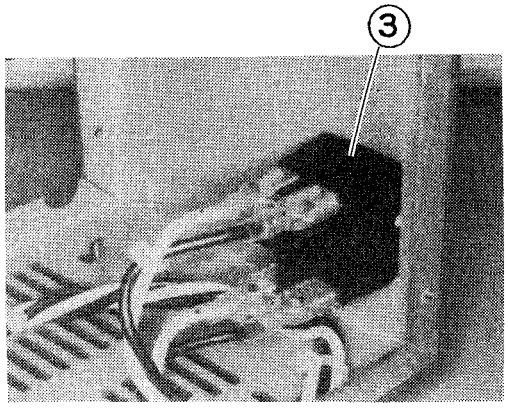

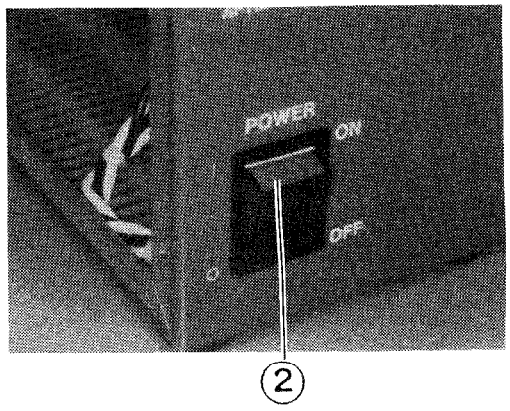

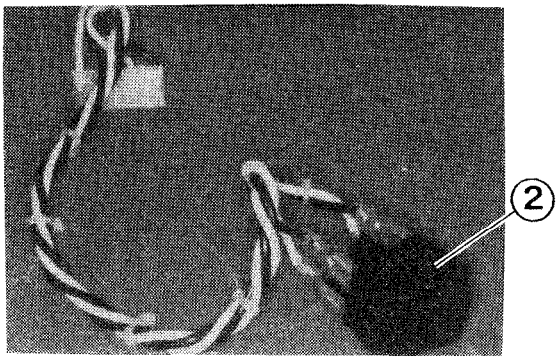

CONTENTS

* FOR SAFETY PURPOSE, BE SURE TO USE THE SPECIFIED PART WHEN REPLACING EACH ELECTRICAL PART.

1. ASSEMBLY OF MAIN-SW

1-1 Insert the MAIN-SW (1) into the front panel in position.

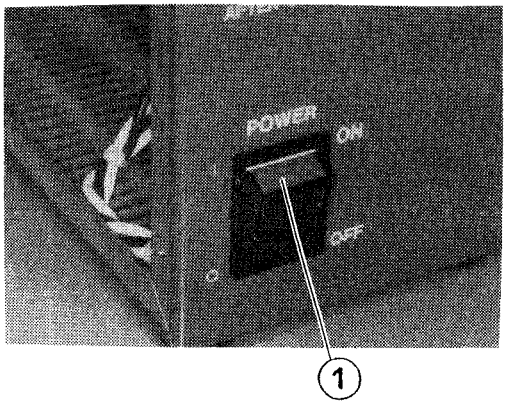

2. ASSEMBLY OF COUNTER-ASS'Y

2-1 Insert the COUNTER-ASS'Y (2) and fasten it with the SPRING (3).

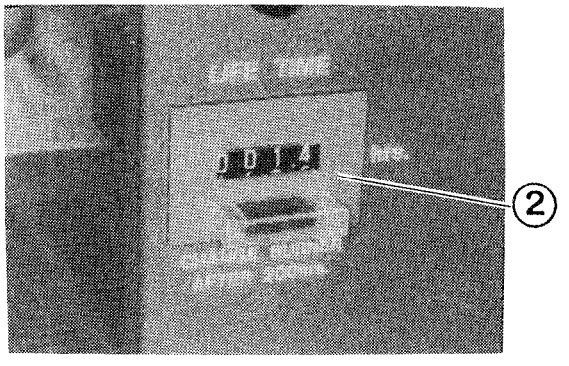

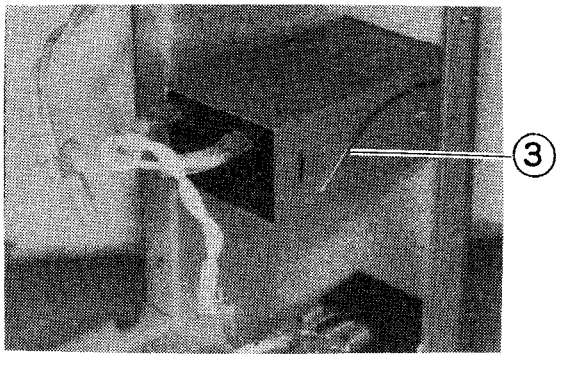

3. ASSEMBLY OF LED-ASS'Y

3-1 Insert the LED ASS'Y (4) and fasten it with the NUT (5).

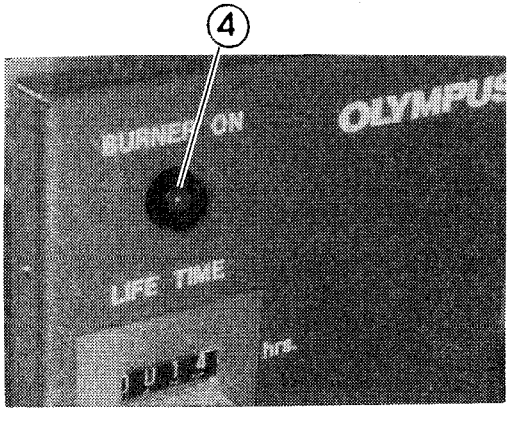

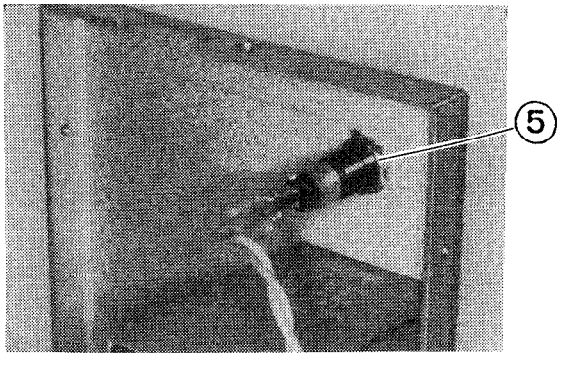

4. ASSEMBLY OF OUTLET-ASS'Y

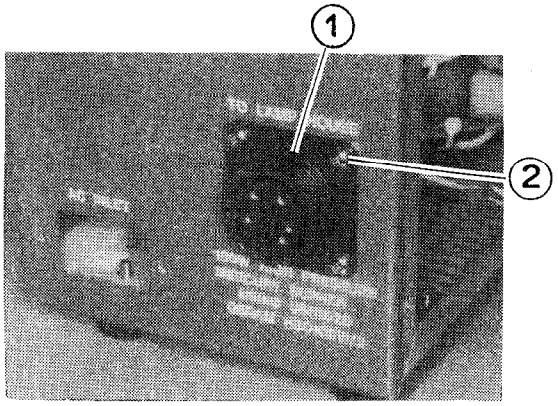

4-1 Attach the OUTLET-ASS'Y (1).

SCREW (2) CTK3x6SA 4 pcs.

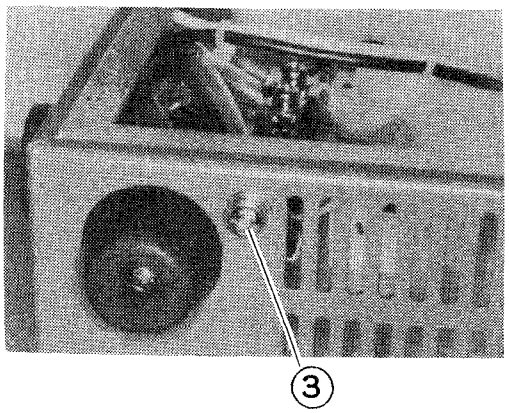

4-2 Fasten the EARTH-CABLE to the bottom with the SCREW (3).

SCREW CUKSB4x16BN 1 pc.

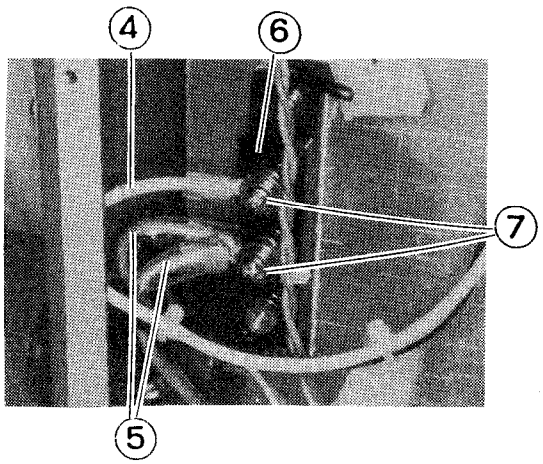

4-3 Connect the cord (1 orange cord (4) and 2 red cords (5)) to the DIODE (6).

SCREW (7) CUKSB 4x8BN 2 pcs.

5. ASSEMBLY OF IGNITION-PCB

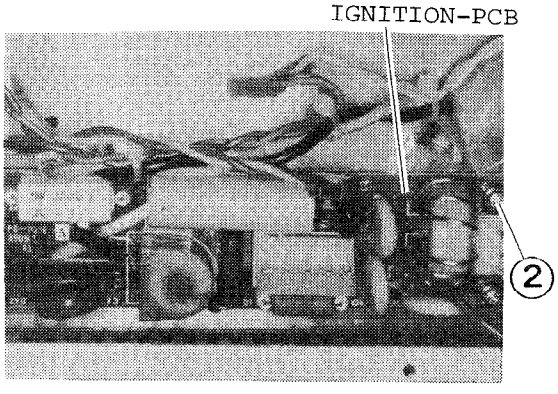

5-1 Mount the IGNITION-PCB (1).

SCREW (2) CUKSK 3x20SA 3 pcs.

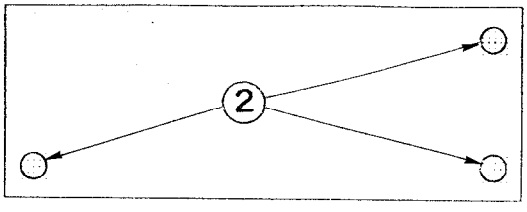

IGNITION-PCB

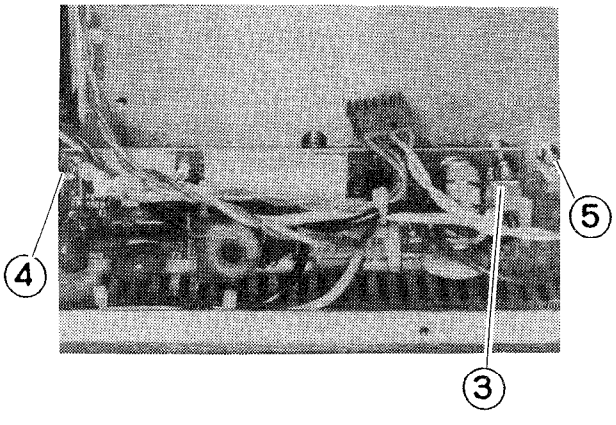

5-2 Insert the CONNECTOR (3) (CNA, CNB) into the PCB, and fasten the cord to TL1 TERMINAL-BLOCK (4) with a SCREW.

SCREW CUKSB3x6BN 1 pc.

Connect the EARTH-CABLE extending from the PCB.

SCREW CUKSB3x6BN 1 pc.

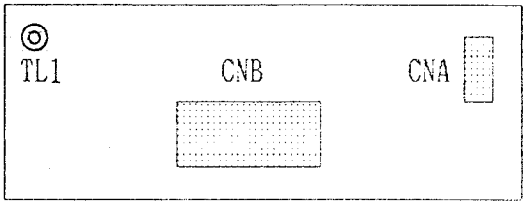

IGNITION-PCB

6. ASSEMBLY OF CONTROL-PCB

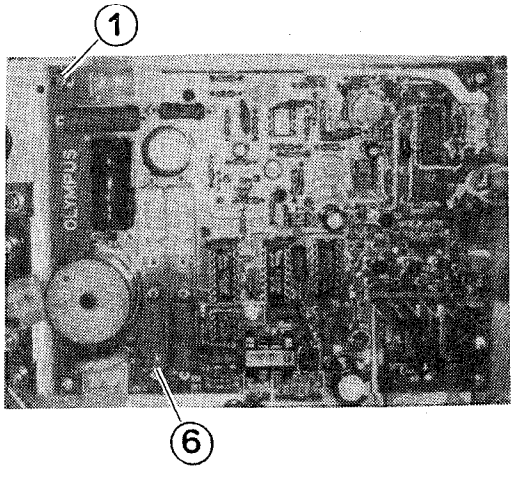

6-1 Mount the CONTROL-PCB (6).

SCREW (7) CUKSK3x20SA 4 pcs.

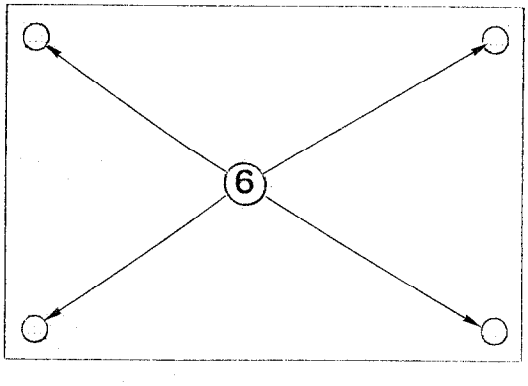

CONTROL-PCB

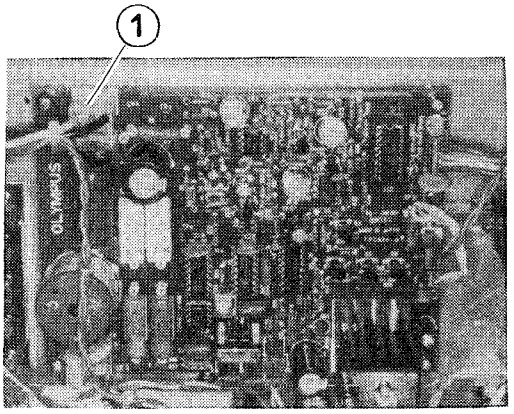

6-2 Insert the CONNECTOR 1 (7 pcs.) into the PCB.

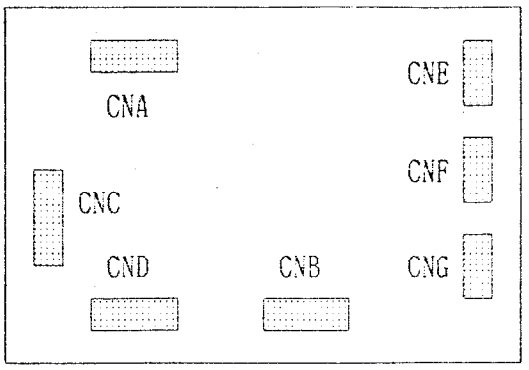

CONTROL-PCB

7. ASSEMBLY OF POWER-PCB

7-1 Mount the POWER-PCB.

SCREW 1 ~ 5 CUKSK3x20SA 5 pcs.
6 ~ 7 CUKSB3x6SA 2 pcs.

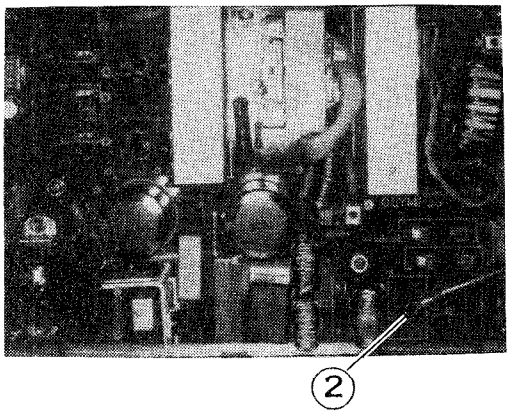

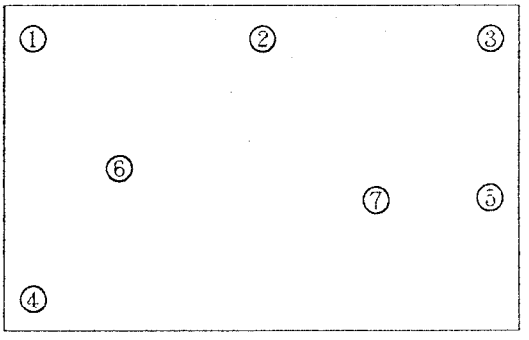

POWER-PCB

7-2 Insert the CONNECTOR 3 (4 pcs.) into the PCB, and fasten the cord to TL1 and TL2 terminal blocks 4 and 5 with a SCREW.

SCREW CUKSB3x6BN

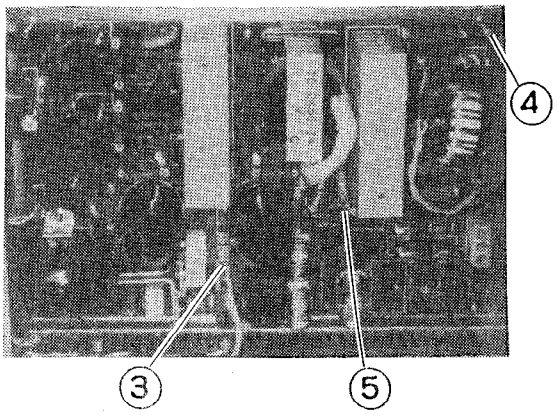

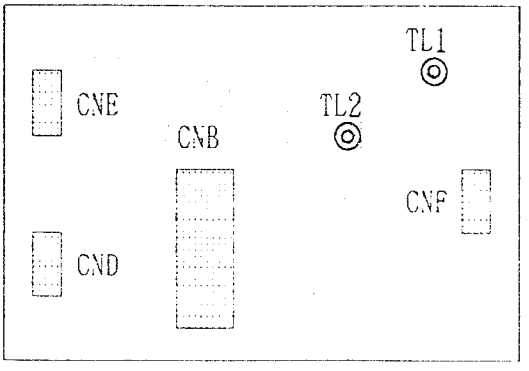

POWER-PCB

8. ASSEMBLY OF INLET-ASS'Y

8-1 Attach the INLET-ASS'Y ①.

SCREW ② INLET-ASS'Y (for 100V) = CTK3x6SA 2 pcs.

INLET-ASS'Y (for 200V) = CQK3x8SA 2 pcs.

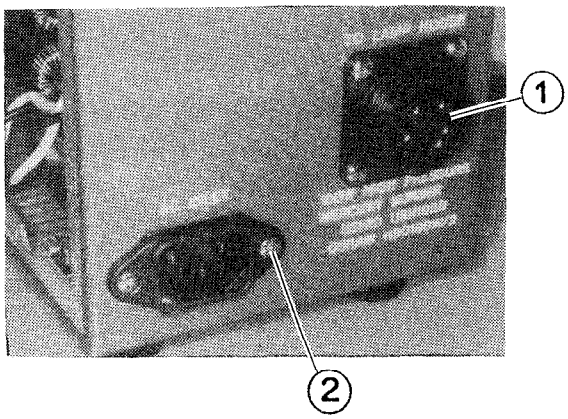

8-2 Insert the CONNECTOR (CNA) ③ into the power PCB, and fasten the EARTH-CABLE to the bottom with the SCREW ④.

SCREW ④ CUKSB4x16BN 1 pc.

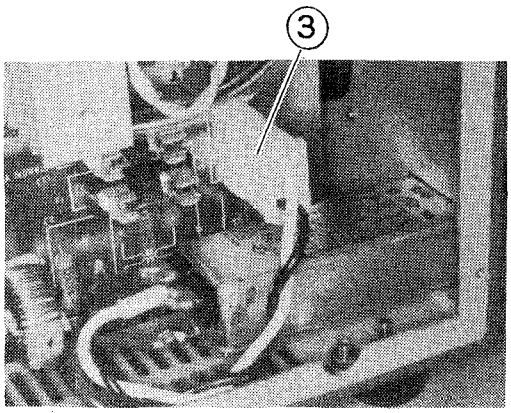

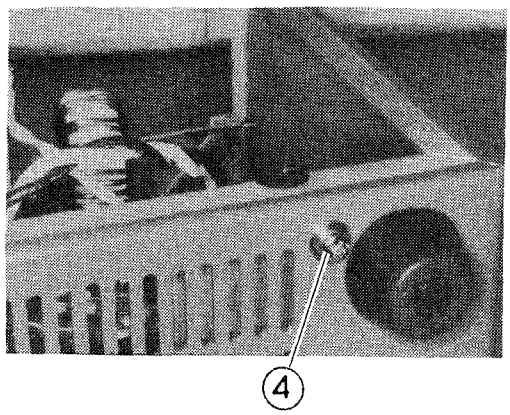

8-3 Attach the COVER.

SCREW ⑤ CTK3x6SA 10 pcs.

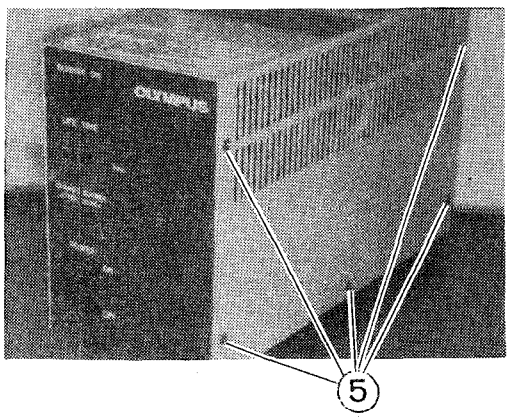

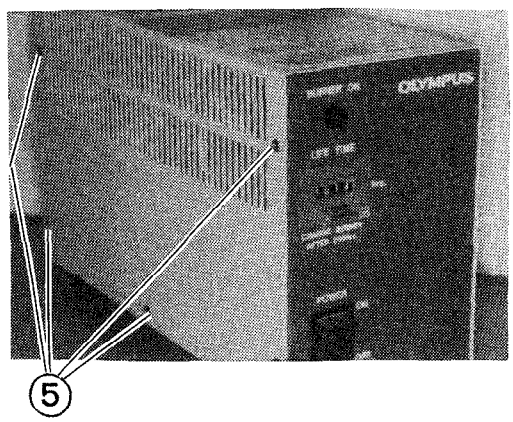

CONTENTS

1. OUTLINE

This is a power supply to light up the 100W MERCURY-BURNER. It has a built-in DC-IGNITION. Artificial CONSTANT-VOLTAGE DRIVE is employed to drive a lamp. An external interlock is provided.

2. CIRCUIT DESCRIPTION

This power supply employs the PULSE-DURATION-CONTROL HALF BRIDGE INVERTER SYSTEM that contributes to compactness, light weight and high efficiency. Fig. 17 shows the overall view of the circuit. Fig.18 ~ Fig.20 show the printed circuit boards PB1, PB2 and PB3. The power supply consists of the functional blocks shown in Fig. 21. The blocks are explained according to the circuit diagrams of Fig.1 ~ Fig.16.

PB1 = POWER PCB

PB2 = CONTROL PCB

PB3 = IGNITION PCB

* The circuit diagram of BH2-RFL-T3-200 (for 200V) is shown below in explanation of the blocks. The circuit diagram of BH2-RFL-T3-100 (for 100V) is omitted, because it is the same as the circuit diagram of BH2-RFL-T3-200 except the parts (jumper pin, fuse, etc.).

① INPUT-FUSE (Fig. 1)

F1 and F2 of PB1 are the input fuses. A 3.15A slow-blow miniature type fuse is used. F2 is not mounted for 100V.
Input current is about 2.8A for 100V and 1.6A for 200V.

② NOISE-FILTER (Fig. 1)

This is a circuit comprising L2 ~ L4, C1, C2, R26 and R27 of PB1, which minimize a surge of the power supply and prevent a switching noise generated inside from being leaked to the outside. It is effective as a filter for the noises in both common mode and normal mode. (L2 is a choke in the common mode, and L3, L4 are the chokes in the normal mode.) C2 contains three condensers molded inside. R26 and R27 are the resistors to quickly discharge the condenser.

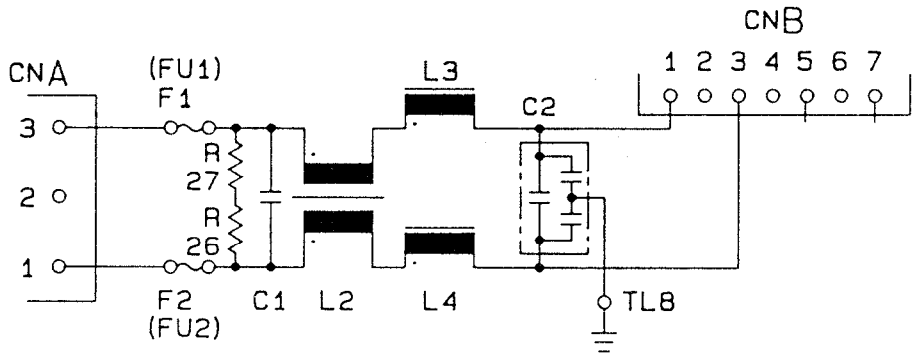

Fig. 1 Input fuse and noise filter

③ PRIMARY RECTIFIER & SMOOTHING CIRCUIT (Fig. 2)

This is a circuit comprising D1, C7, C8, R4, R24, R5 and R25 of PB1, which rectifies AC input and outputs as positive and negative DC current. C6 is a pass condenser to escape a noise to the body. D1 rectifies AC input, and C7, C8 ELECTROLYTIC-CONDENSERS smooth it to output as DC current.
Jumper is mounted for 100V. This circuit functions as a voltage doubler rectifier, and about DC150V is supplied at both ends of C7, C8 in either type for 100V or 200V.
R4, R24, R5 and R25 are resistors to balance the DC voltage of C7, C8 ELECTROLYTIC-CONDENSERS connected in series and discharge them quickly at power off.

④ RUSH CURRENT LIMITATION CIRCUIT (Fig. 2)

This is a circuit comprising R1 and Q1 of PB1. Q1 is a triac.
It limits rush current generated at power on for charging the C7, C8 ELECTROLYTIC-CONDENSERS in the PRIMARY RECTIFIER & SMOOTHING CIRCUIT.
When the rush current is limited (to approx. 20A or lower) by R1 (10 ohm) and the condensers C7 and C8 are charged, R1 is shorted by oscillation of T1 (see Fig. 3) and turning on of Q1.
At this time, secondary rush current flows. (Approx. 35A)
The current flows through R1 for 50 ~ 70msec.
R1 contains a THERMAL-FUSE (130°C). If Q1 should not be turned on, R1 temperature increases suddenly and the THERMAL-FUSE is blown to stop the power supply operation.

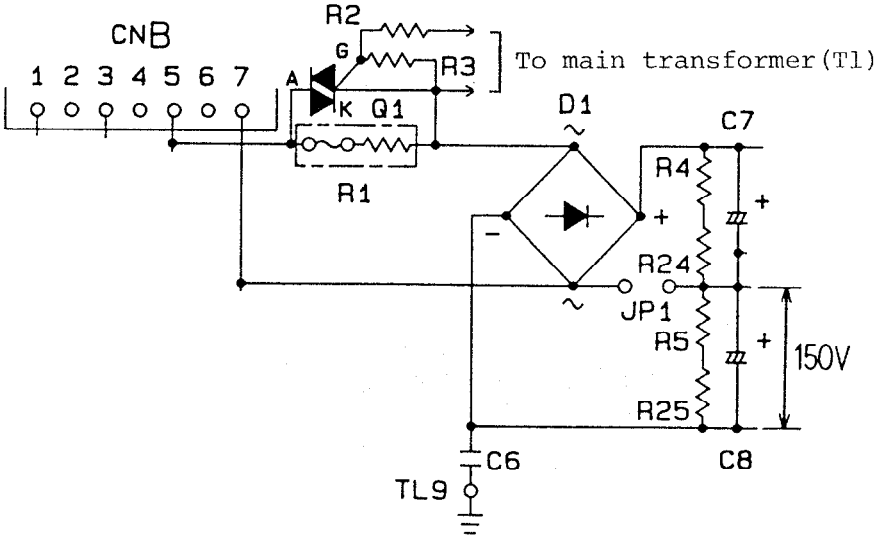

Fig. 2 PRIMARY RECTIFIER & SMOOTHING CIRCUIT and RUSH CURRENT LIMITATION CIRCUIT

⑤ INVERTER-CIRCUIT (Fig. 3)

This is a circuit comprising Q2, Q3, T1, C9, R6, C10 and R7 of PB1. HIGH FREQUENCY & RECTANGLE WAVE VOLTAGE of 40kHz can be obtained by turning on and off Q2 and Q3 alternately by the driver circuit described later.
MOS-FET is used for Q2 and Q3.
C10 and R7 make a circuit to absorb spike voltage caused by leakage inductance of the PRIMARY-COIL of the main transformer T1. (SNUBBER-CIRCUIT)
C11 stabilize potential of the HEAT SINK with Q1, Q3 mounted and prevents generation of noise.
About 300V is supplied to both ends of Q2 and Q3.

⑥ MAIN-TRANSFORMER (Fig. 3)

This comprises T1 of PB1, and converts the high frequency & rectangle wave voltage of 40kHz/150V obtained by the inverter circuit into about 40V rectangle wave voltage. A ferrite core is used for MAIN-TRANSFORMER T1. The COIL shown on P2 is to control triac Q1.

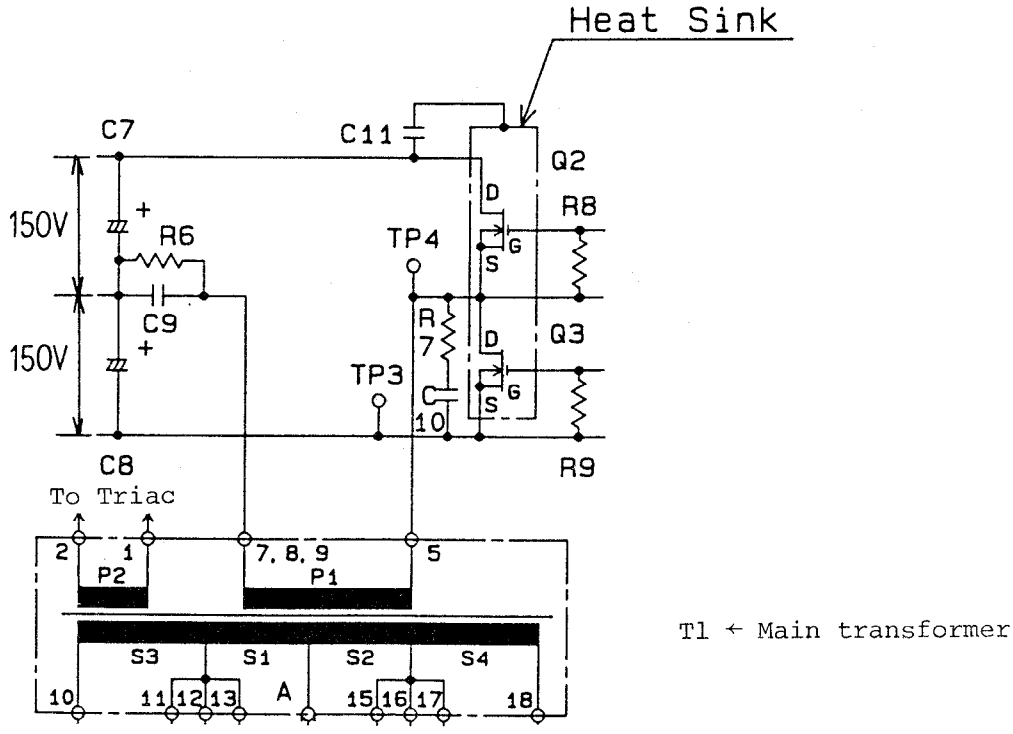

Fig. 3 Inverter circuit and main transformer

⑦ SUPERIMPOSED-CIRCUIT (Fig. 4)

This is a circuit comprising R18, D8, R19 and D9 of PB1, which changes the output voltage to about 85V just before lighting on a lamp. (OPEN-VOLTAGE at no load)
The voltage generated from S3 and S4 coils of T1 is current limited by R18, R19 and half-wave rectified by D8 and D9.
This voltage is fluctuated by input voltage and input voltage waveform.

⑧ SECONDARY RECTIFIER & SMOOTHING CIRCUIT (Fig. 4)

This is a circuit comprising D11, D10, R20, C14, R21, C15, R23, C17 and L5 of PB1. D11 and D10 full-wave rectifies about 40V rectangle wave voltage induced in the secondary coil (S1, S2) of the main transformer T1, and L5 of PB1 and C3 of PB2 smooth the voltage to provide DC output voltage. R23 and C17 are surge absorbers to prevent the spike voltage generated in the secondary coil from being returned to the primary side. R20, C14, R21 and C15 are surge absorbers to prevent breakage of D11 and D10.
C13 stabilizes potential of the heat sink with D11 and D10 mounted and prevents generation of noise.

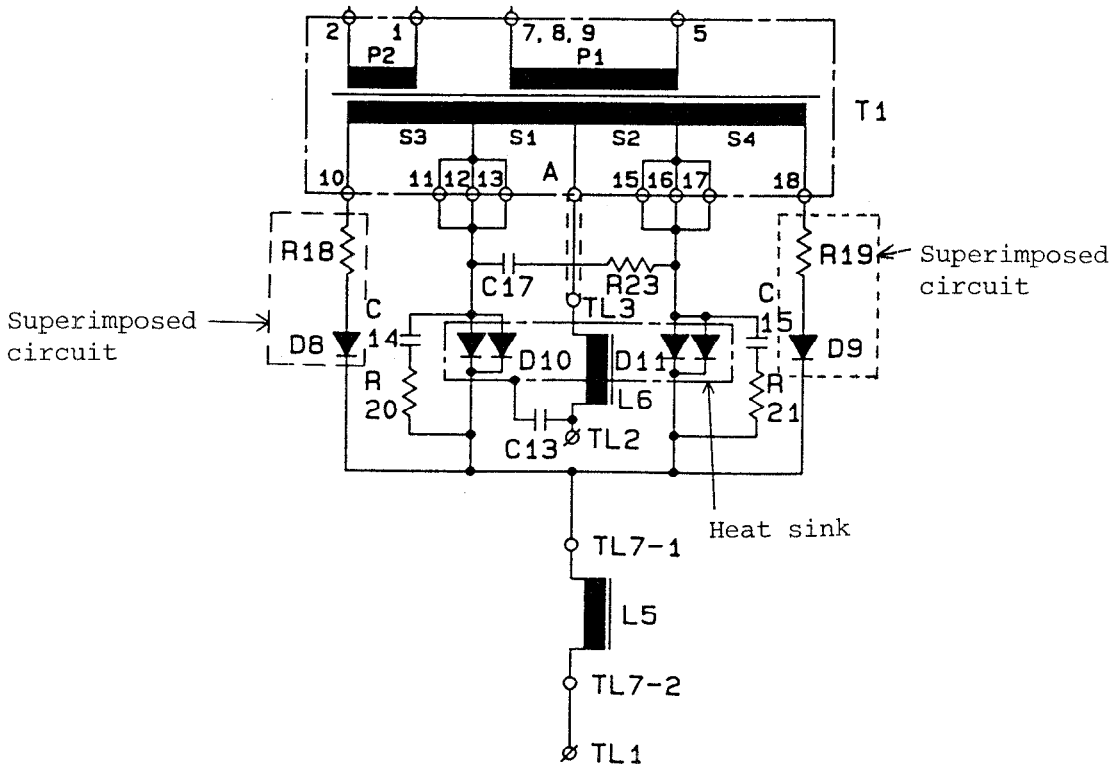

Fig. 4 Superimposing circuit and secondary rectifier & smoothing circuit

⑨ OUTPUT CURRENT DETECTOR (Fig. 5)

This circuit comprises R2 and R3 of PB2, and feeds the voltage generated at both ends of these resistors back to the PWM driver as an output current signal.

⑩ CIRCUIT for LAMP DAMAGE PREVENTION and IGNITION ABILITY (Fig. 5)

This circuit comprises L1, R1, C1, D1 and R4 of PB2, and prevents damage of a lamp at lighting and improves ignition ability. Lamp voltage of the mercury burner 100W is 20V at stabilized. But, high DC voltage of about 1.6kV is required at ignition to break down the lamp electrodes. Besides, it is necessary to charge the electrolytic condenser C1 to DC85 ± 10V for improving ignition ability.
C1 has been charged to DC85 ± 10V by the superimposed circuit, and will be discharged with strong flashing of the lamp when the lamp electrodes are broken down by the ignition. R1 limits the peak value of rush current to the lamp at this time. (Without R1, the peak value of the rush current from C1 to the lamp is high and the current wave duration becomes small.) L1 prolongs the discharging time and suppress the rush current to the lamp at ignition. This minimizes wear of the lamp electrodes, and prolong the lamp life. R4 quickness rising of current immediately after break down of the lamp. D1 is used to prevent drop of the lamp current caused by resonance of L1 and C3.

⑪ OUTPUT FILTER CIRCUIT (Fig. 5)

This circuit comprises C4 of PB2 and L1, C1 ~ C3, R1, and V1 of PB3, and prevents a noise at actuation of the ignition. R1 and V1 let the current run in the body when the line is electrically floated from the body by the ignition.

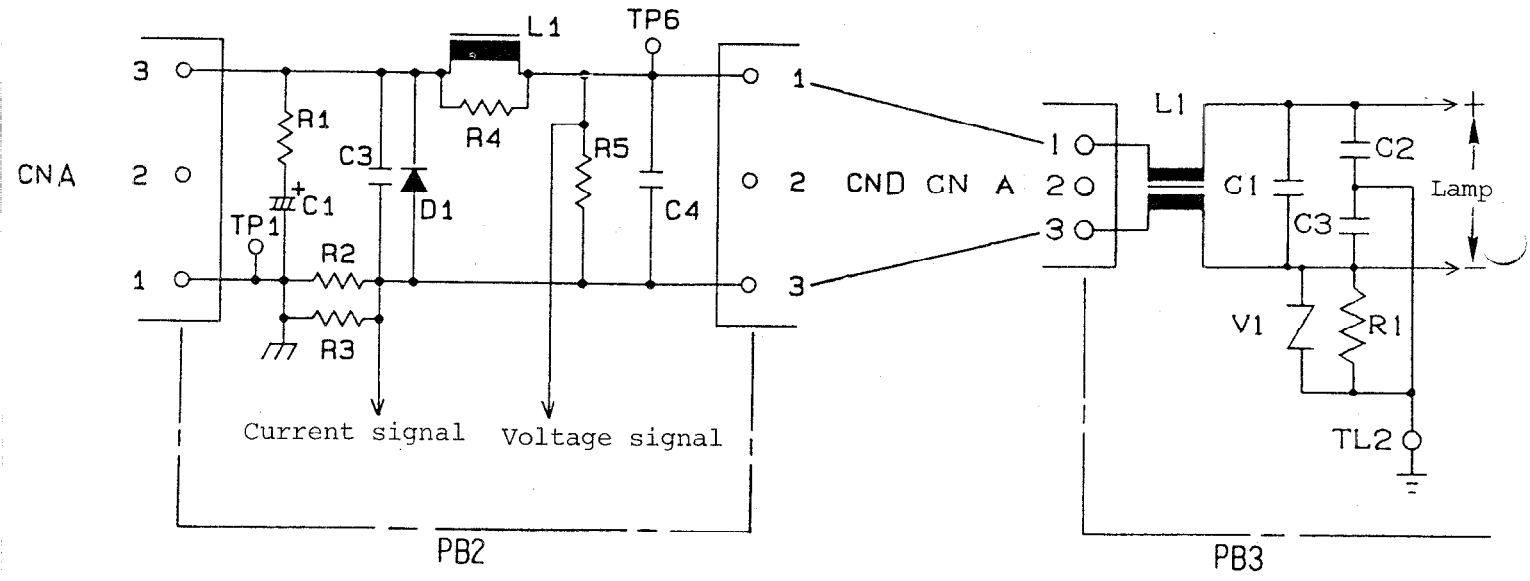

Fig. 5 OUTPUT CURRENT DETECTOR, circuit for lamp damage prevention and ignition ability and output filter circuit

(12) AUXILIARY TRANSFORMER and RECTIFIER CIRCUIT (Fig. 6)

T4 of PB1 is an auxiliary transformer, which supplies 12V to the driver of PB2. For 100V, a transformer which outputs about AC16V for AC100V input is mounted.
R22 and C16 of PB1 absorb abnormal voltage generated at turning on/off the power switch. Output voltage of T4 is full-wave rectified by D8 of PB2 and stabilized to +12V by C23, C24, C25 and IV7.
D9 protects IC7 when reverse voltage is generated.

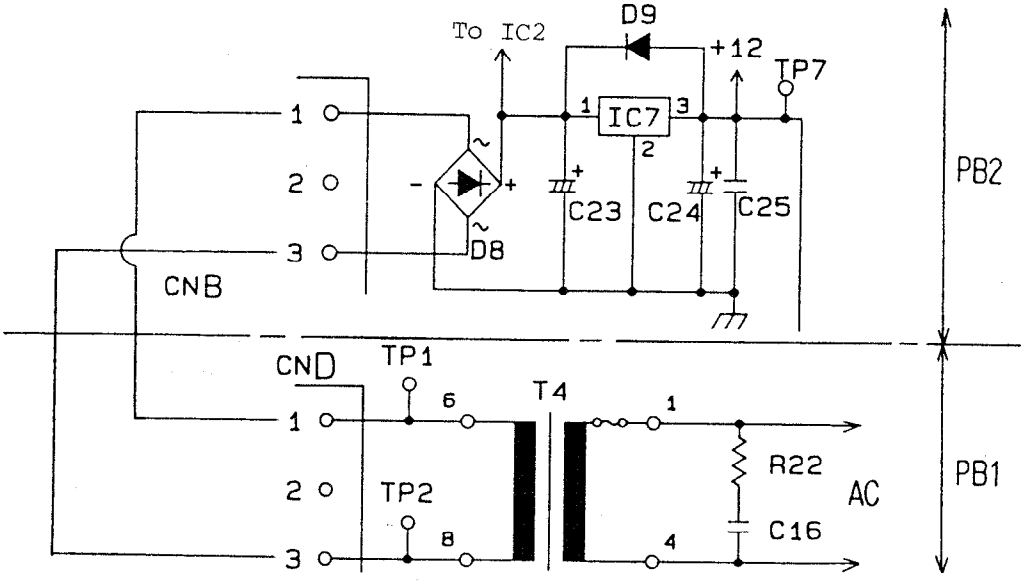

Fig. 6 Auxiliary transformer and rectifier circuit

(13) PWM DRIVER (PB2) (Figs. 7, 8 and 9)

Stable constant-current and constant-power driving with IC1 and IC2. (Constant-current driving when the output voltage is low immediately after ignition of the lamp, and constant-power driving when the output voltage is increased over 16V.) IC2 is an INTEGRATED-CIRCUIT exclusive to PWM switching regulator.
Block diagram and terminal connection diagram of IC2 are shown below.

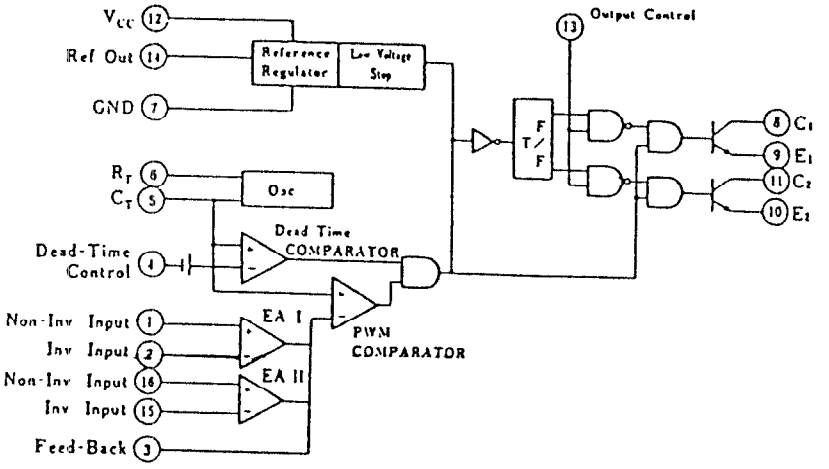

Fig. 7 Block diagram

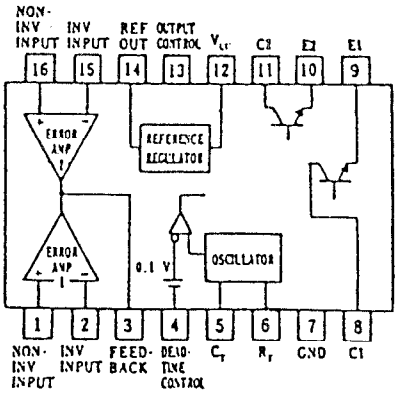

Fig. 8 Terminal connection diagram

- Pins (1), (2), (15) and (16) of IC2 are the input of the ERROR-AMPLIFIER, forming a feedback loop so that the output current signals obtained from the CURRENT-DETECTING-RESISTORS R2 and R3 coincide with the reference signal supplied to IC2, PIN (2).
- IC2, PIN (4) is a terminal to set a pause duration to prevent simultaneous turning on of Q2 and Q3 of PB1 (inverter circuit).
  VR3 and R37 set a pause duration to about 2 sec.
  IC2, PIN (4) is used also for soft start, and the output pulse duration is increased gradually from 0 in the period from power on to the end of charging C15.
  About 1 ~ 1.5 second is required to run completely after power on.
  IC2, PIN (4) is also used for interlock. When PC1 or PC3 turns on, a reference voltage (5V) is supplied to IC2,PIN (4) and the pause duration is prolonged with stop of oscillation.
- IC2, PINs (5) and (6) are the terminals to connect R36 resistor and C13 condenser to determine the high frequency inverter's operating frequency.
- IC2, PIN (8) and (11) generate PWM output signals displaced 180° in phase to each other.
- IC2, PIN (12) is a power supply input terminal.
  C12 and R41 are inserted to prevent a malfunction of IC caused by a noise.
- IC2, PIN (14) generates a reference voltage, 5V stabilized by the circuit in IC. This reference voltage is used for soft start and as a driving reference signal for output current and output voltage.

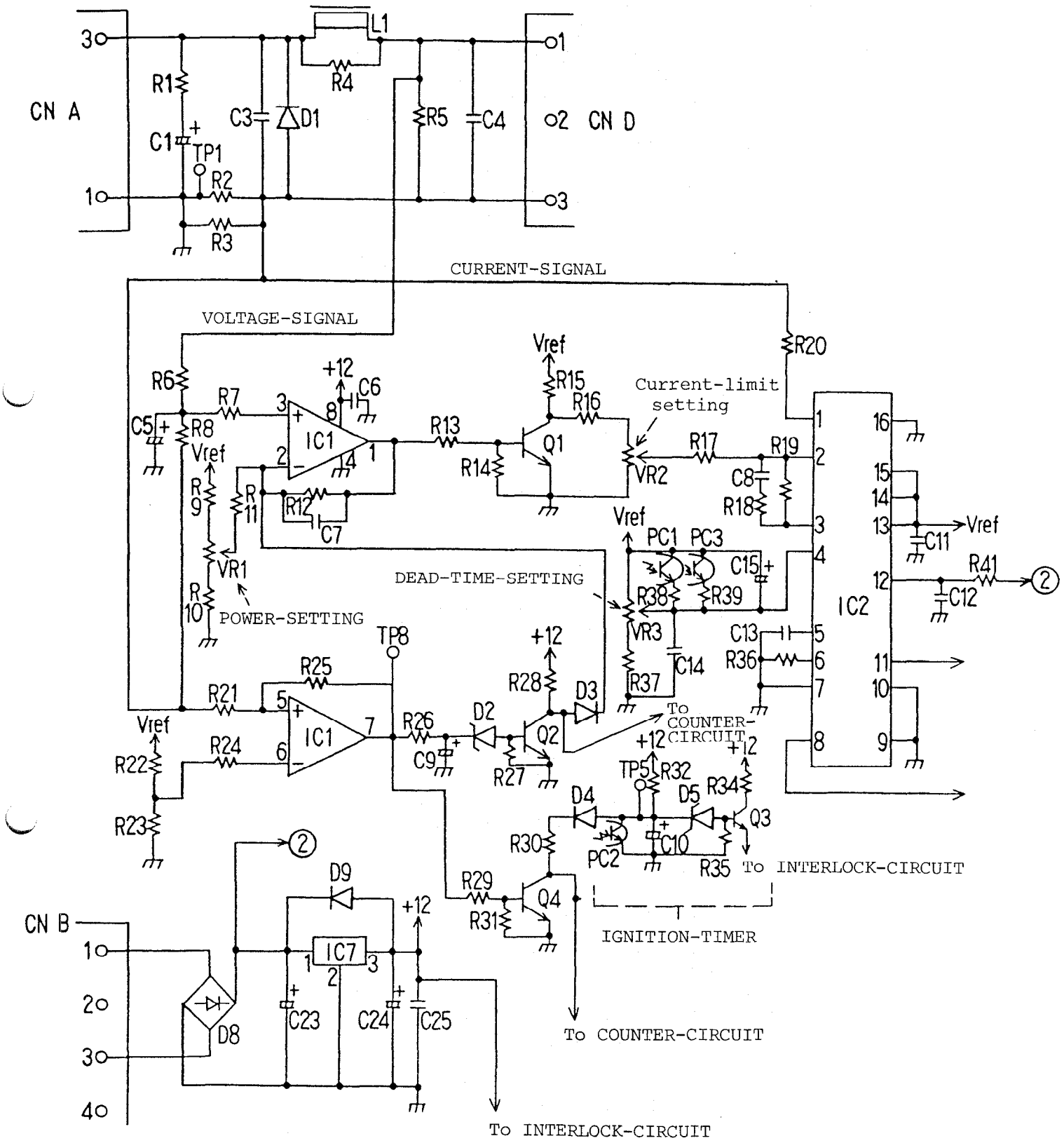

Fig. 9 PWM driver

(14) CONSTANT-POWER DRIVER (Figs. 10 and 11)

Constant-current driver when the output voltage is low, and constant-power driver when the output voltage is increased. Output voltage signal and output current signal are supplied to IC1, PIN (3) through R6 and R8. Reference voltage determined by R9, R10 and VR1 is supplied to IC1, PIN (2). Difference between the reference voltage and (output voltage signal + output current signal) is supplied to IC1, PIN 1 as a gain determined by R12. Signal of IC1, PIN (1) is inverted by Q1 and applied to IC2, PIN (2). The signal is driven so that it coincides with the output current signal. Artificial constant-power driving is made in such a circuit. Exact constant-power driving is made in the form of (output voltage signal × output current signal), but even (output voltage signal + output current signal) can be regarded constant-power as shown below.

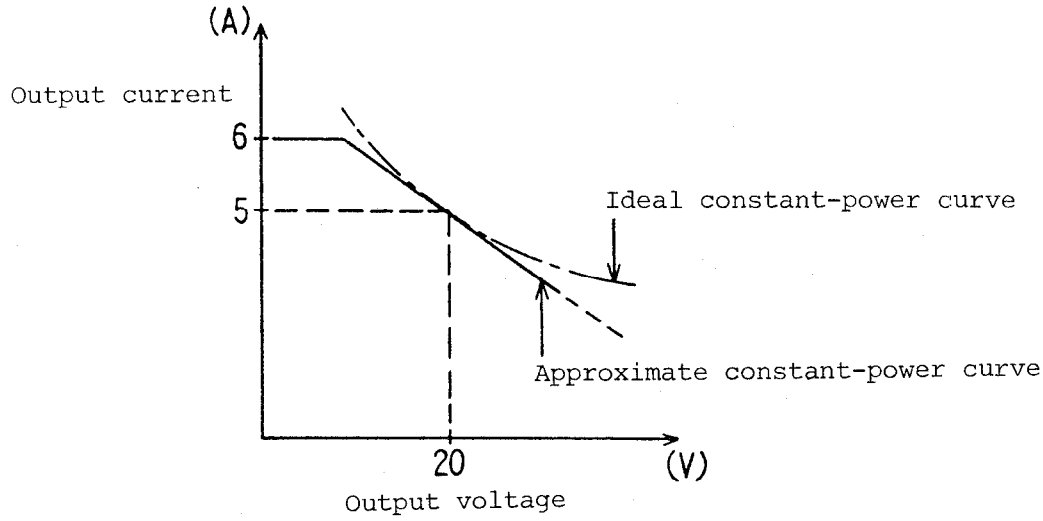

Fig. 10

Output voltage signal is set by the resistance ration between R6 and R8, so that it becomes about 1/100 of actual lamp voltage. Reference voltage of VR1 is variable in 0.1 ~ 0.6V. VR1 is actually adjusted so that the output current of 5A can be obtained when the output voltage is 20VA. Maximum value of output voltage is restricted by the constant-current driver described later.

(15) Constant-current driver (PB2) (Fig. 11)

When the output voltage signal is low, (output voltage signal + output current signal) is lower than the reference voltage determined by R9, R10 and VR1 and the output at IC1, PIN (1) is 0V and Q1 turns off. At this time the voltage determined by R15, R16 and VR2 is applied to IC2, PIN (2) to be controlled so that this voltage becomes equal to the output current signal.
Adjustment range of VR2 is 0A ~ 9A equivalent to output current. For actual adjustment, connect a dummy resistor of 1 ~ 1.5 ohm to the unit output so that the output current becomes about 6A. (Because the voltage immediately after ignition of a lamp is considered 5 ~ 10V.)

(16) Light-on detector (PB2) (Fig. 11)

Output current signal is used also for light-on detection. The voltage at IC1, PIN (6) determines the light-on detection level, and set to about 0.09V by R22 and R23.
When an output current signal exceeds this voltage, IC1, PIN (7) becomes HIGH. As an output current signal is 0.05 time of output current, IC1, PIN (7) becomes HIGH when an output current exceeds 1.8A. After IC1, PIN (7) becomes HIGH and the time determined by R26, C9 and D2 passes, Q2 turns on. Q2 has two functions. One is to turn on the lighting counter driving circuit and count it up one. The other function is to improve the lamp's lighting ability.
Before Q2 turns on, +12V is supplied to IC1, PIN (2) through D3 and the constant power driver reference voltage becomes 12V. This means that the constant-power driver is restricted and constant-current driver functions instead before Q2 turns on. The lamp voltage may increase immediately after ignition. Constant-power driver decrease the output current as the lamp voltage rises, increasing the lamp voltage as a result. To prevent it, only the constant-current-driver is operated for about one second (time determined by R26, C9 and D2) after detection of the lamp light-on.

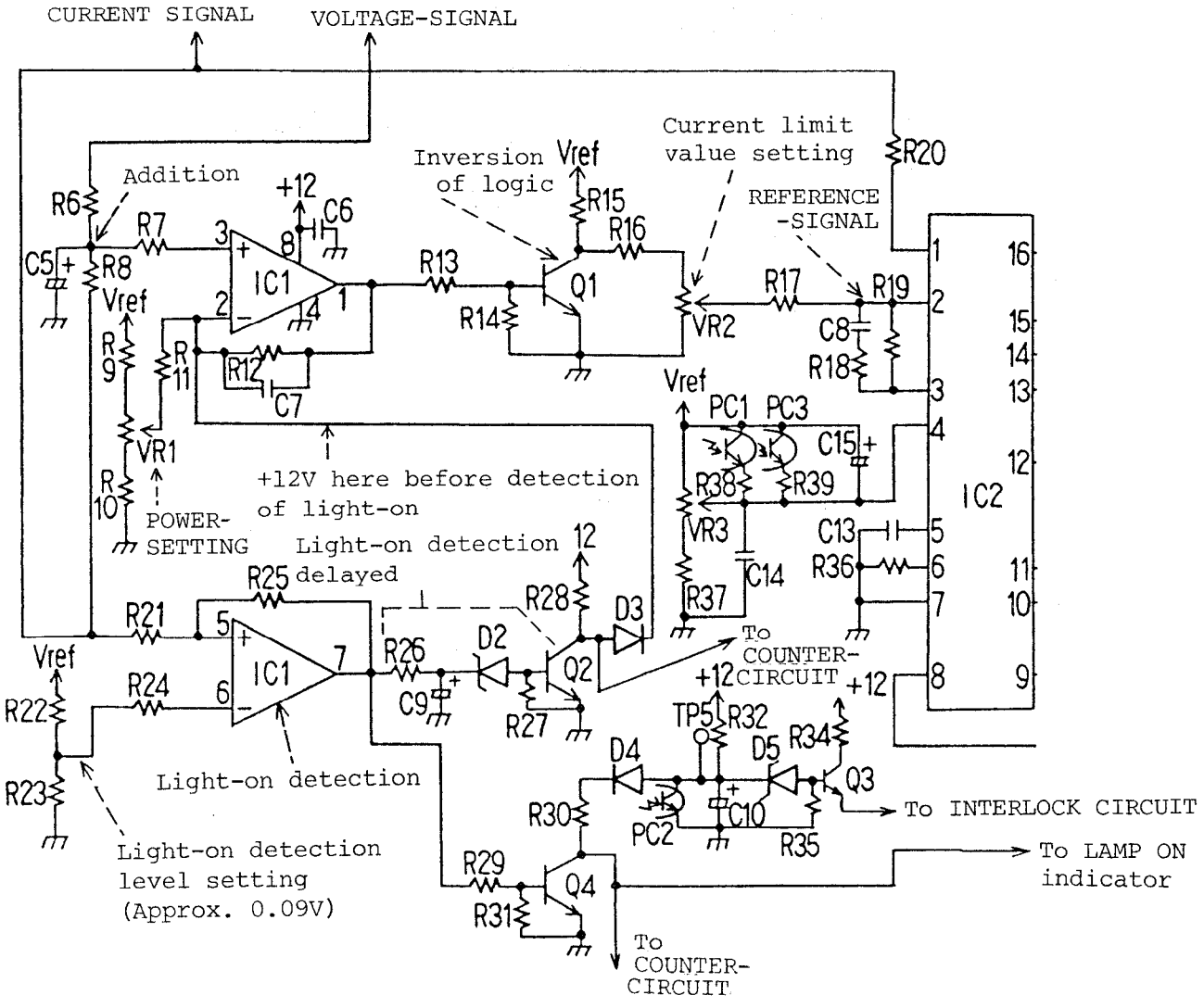

Fig. 11 Constant-power driver, constant-current driver and light-on detector

(17) IGNITION-TIMER (PB2) (Fig. 12)

This stops the ignition high voltage for safety when a lamp fails to light on for a long time. When the power switch is turned on and 12V is supplied to the driver, Q3 turns on after the time (approx. 11 seconds) determined by R32, C10 and D5 and PC3 is turned on accordingly.
With PC3 turned on, as above described, oscillation of IC2 stops and the power supply fail to function and the ignition stops, too. (The ignition function will be described later.) If Q4 turns on before Q3, the charging current to C10 flows in Q4 and this timer is reset.
Q4 turns on simultaneously with detection of light-on, and the timer is reset simultaneously with lighting on of a lamp.

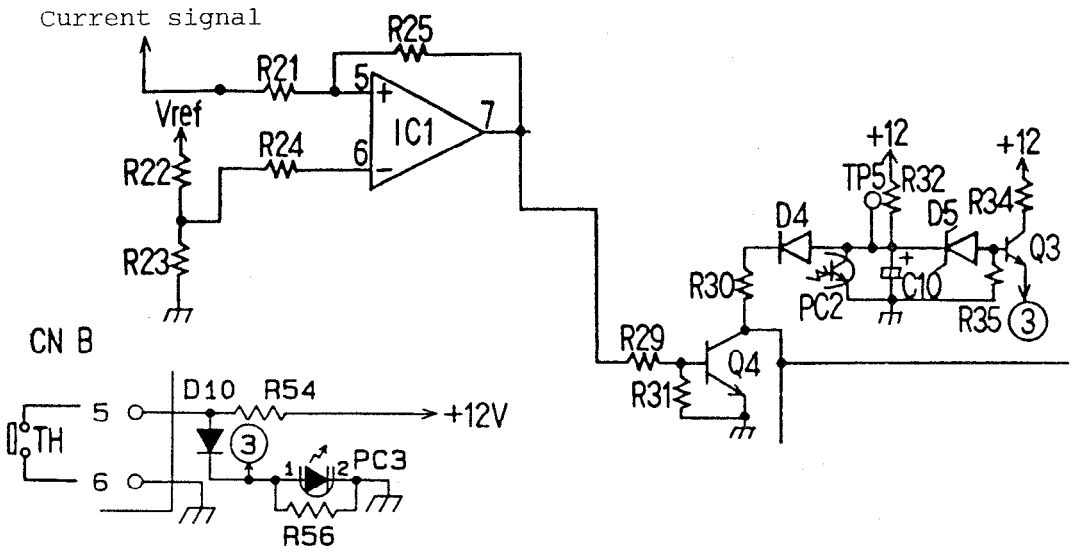

Fig. 12 IGNITION-TIMER

⑱ INTERLOCK (PB2) (Fig. 13)

CNC PIN ① and PIN ③ of PB2 can be used as an interlock.
When these PINs are shorted, no current flows in PC1 and PC2. When these PINs are opened, current flows in PC1 and PC2. When PC1 turns on, IC2 stops oscillation.
When PC2 turns on, the ignition timer is reset.
(Otherwise, if the PINs ① and ③ are opened for over 11 seconds, the power supply fails to functions even if the pins are shorted thereafter.)
When the PINs are shorted again, the power supply functions and lights up again a lamp.
C27, L2 and C26 are noise filters to prevent ingress of noise from CNC to the driver.
In addition to an external interlock, a thermal switch interlock is provided.
The thermal switch is fixed to the heat sink on which D10 and D11 of PB1 are mounted.
The thermal switch (TH1 of PB1) should function at 90° and used as a B-contact.
The signal from the thermal switch is applied to CNB PIN ⑤ and PIN ⑥ of PB2.
When the thermal switch does not function (contact ON), no current flows in PB2 and PC3.
When the thermal switch functions (contact OFF), current flows in PC3 of PB2 and PC3 turns on to stop oscillation of IC2. When the thermal switch functions, it is better to stop the power supply function completely.
So the ignition timer is not reset then.

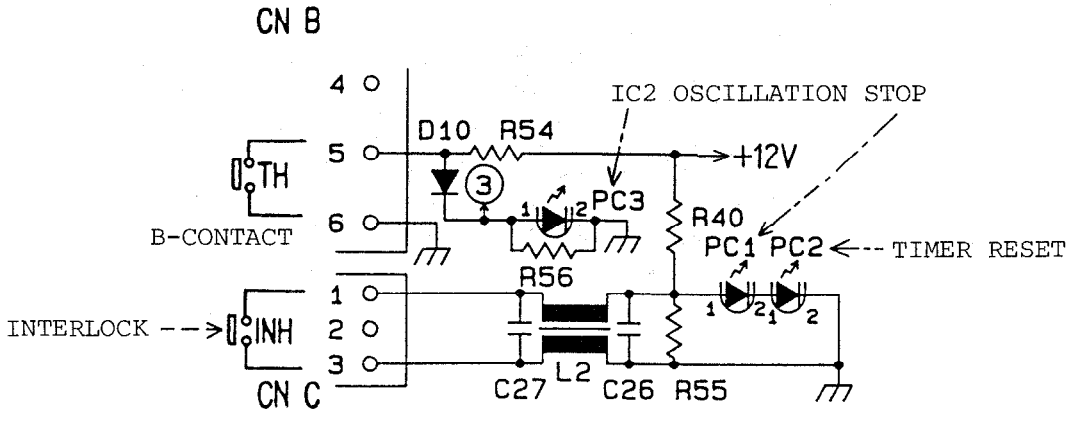

Fig. 13 INTERLOCK

(19) DRIVER-CIRCUIT (PB1) (Fig. 14)

This comprises the parts shown in PB1, and amplifies the PWM drive signal from the PWM driver and drives MOS-FET of the inverter circuit. Q6 and Q7 amplify the PWM drive signal. T2 insulates primary and secondary coils. As backward bias is effected by utilizing the back electromotive force generated by the exciting voltage, a gap is provided in the core.
D6 resets the energy stored in the leakage inductance of the primary side coil.
R14 prevents ringing generated by L-component of the secondary side coil of T2 and the input capacity component of Q2. Q4 is a circuit to pull out quickly the electric charges stored in the input capacity component of Q2.

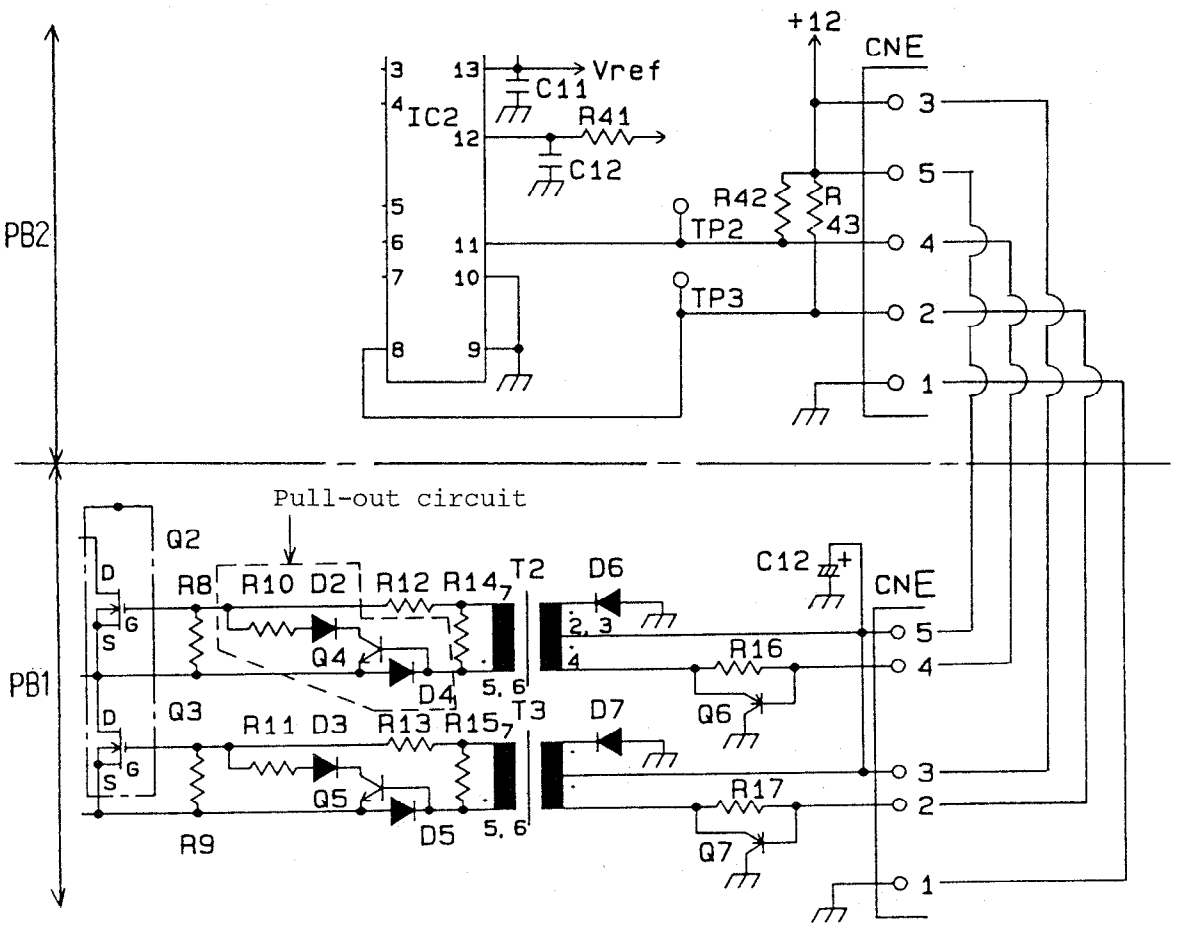

Fig. 14 Driver circuit

(20) LIFE-METER (PB2) (Fig. 15)

The circuit comprising IC3 ~ IC6 of PB2 is a life meter. IC3 is set by VR so that it usually oscillates at about 36ms cycle. Set VR4 by monitoring the voltage cycle of TP4 (check pin). VR4 setting range is 25 50ms.
IC4 and IC5 are dividers, which divide to 1/100.
As 1/36ms = 27.777...Hz, it is divided into 0.0027...Hz by IC4 and IC5.
IC6 is a one-shot vibrator, which receivs an output signal from IC5 and generates a pulse of about 50ms. (PIN (10)) This pulse is amplified by Q5 and Q6 to count up the meter on the panel by one.
When the lamp is not lit, Q4 light-on detector turns off and IC4 and IC5 are inhibited (PINs (7), (15) of IC4 and IC5 and PIN (9) of IC6) and the meter does not function.
When Q4 turns on, IC4 and IC5 are released from the inhibit state and start dividing.
As described in 16 Light-on detector, when Q2 turns on after detection, Q7 turns off and IC6 is triggered (IC6, PIN (8)) and the meter is counted up one.

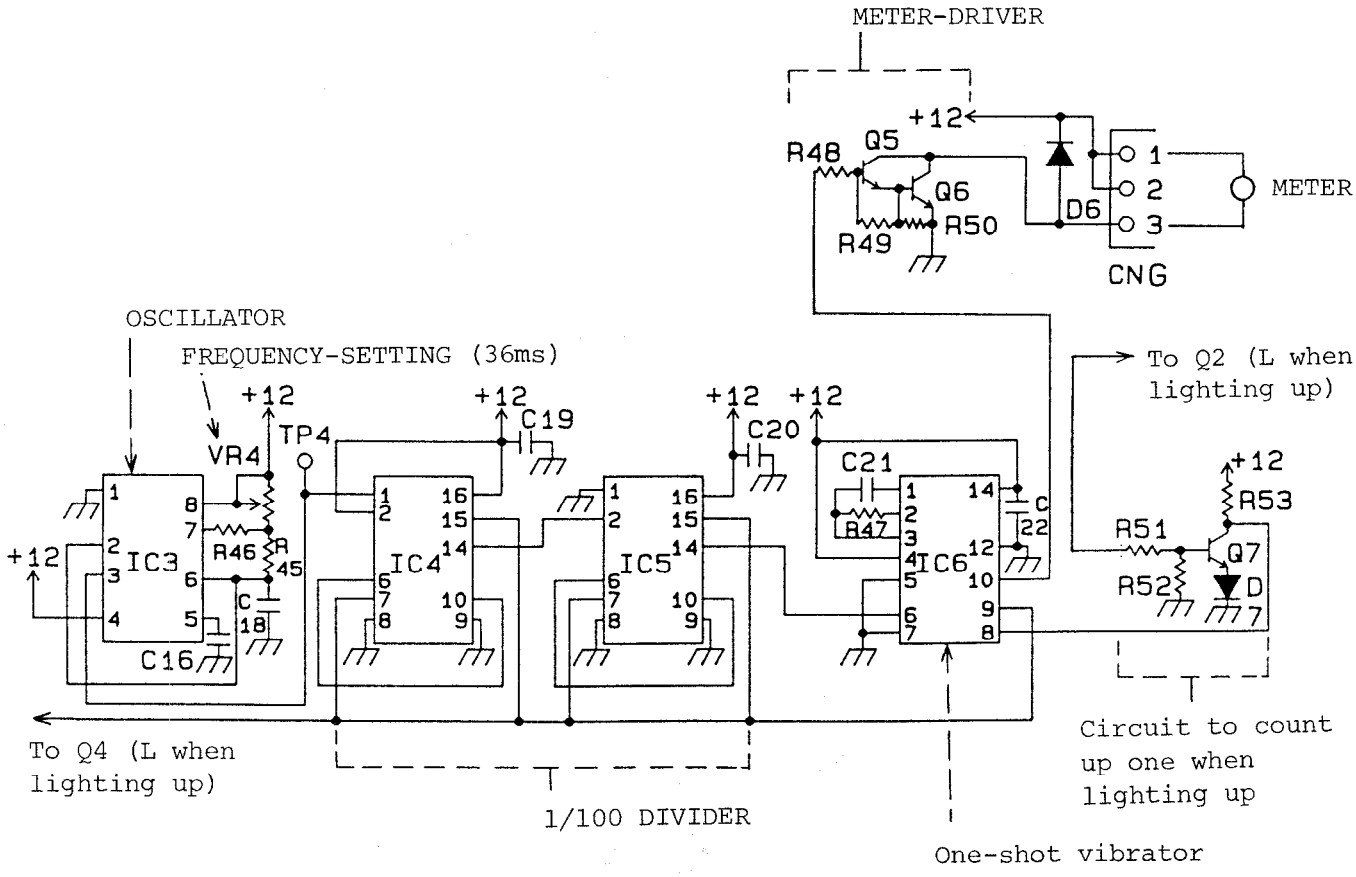

Fig. 15 Life meter

(21) IGNITION (PB3) (Fig. 16)

When no-load open voltage (about 85V) is applied, C4 is charged through R2. When the C4 voltage readhes about 60V, Q1 cydac turns on (at 60V) to discharge the electric charge stored in C4 to the primary side of T1 pulse transformer.
T1 is used as a flyback transformer, transfers the energy stored in the primary side coil of T1 to the secondary side immediately after the end of discharging C4, charging C5 through D1. As T1 is designed to increase the secondary turn ratio to the primary, DC high voltage is stored in C5.
C5 voltage is clamped to about 1600V by variable resistors V2 and V3.
R3 is a resistor to discharge C5 at power off.
When the voltage at both ends of C5 exceeds the breakdown voltage, C5 charges are supplied to the lamp through R4.
R4 is a resistor to suppress the peak value of the current supplied from C5 to the lamp to enlarge duration.
A high-voltage blocking diode is provided to prevent the high voltage generated from the ignition from being applied to the main circuit.
All the current supplied from the main circuit flows through the high-voltage blocking diode.

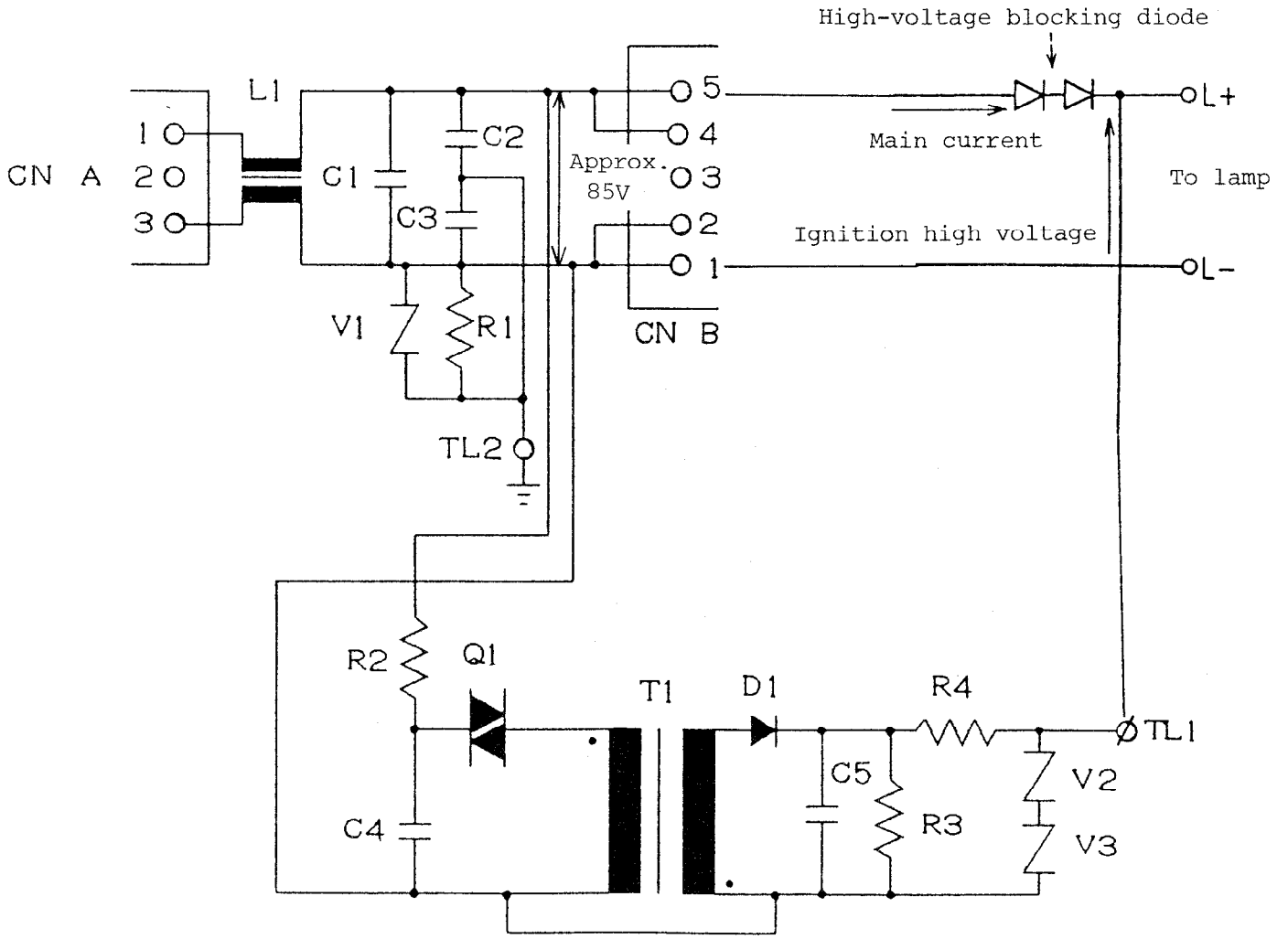

Fig. 16 IGNITION

BH2-RFL-T3

4. Circuit Diagram

1 Overall wiring diagram

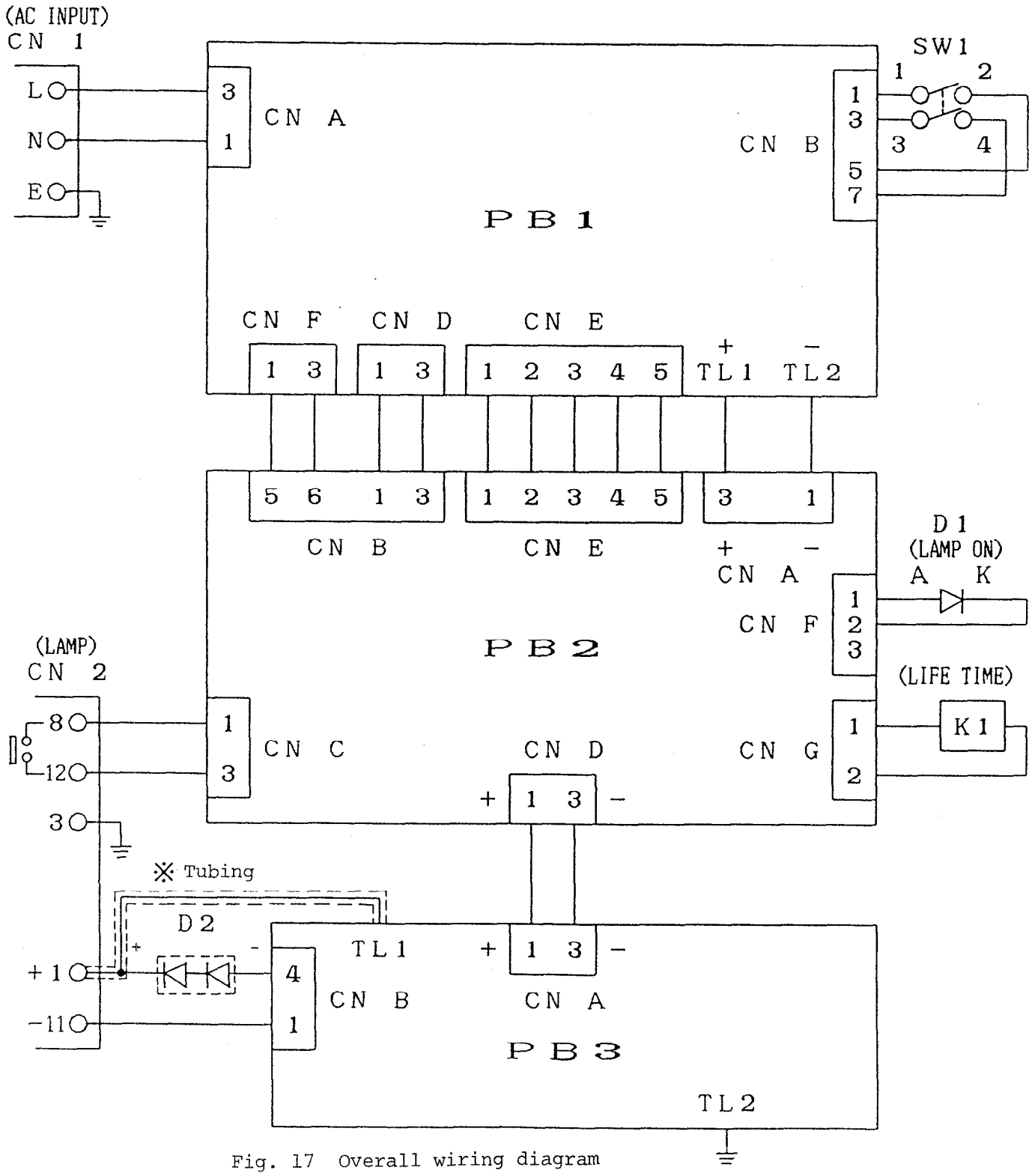

Fig. 17 Overall wiring diagram

D. DESCRIPTION OF MECHANISM

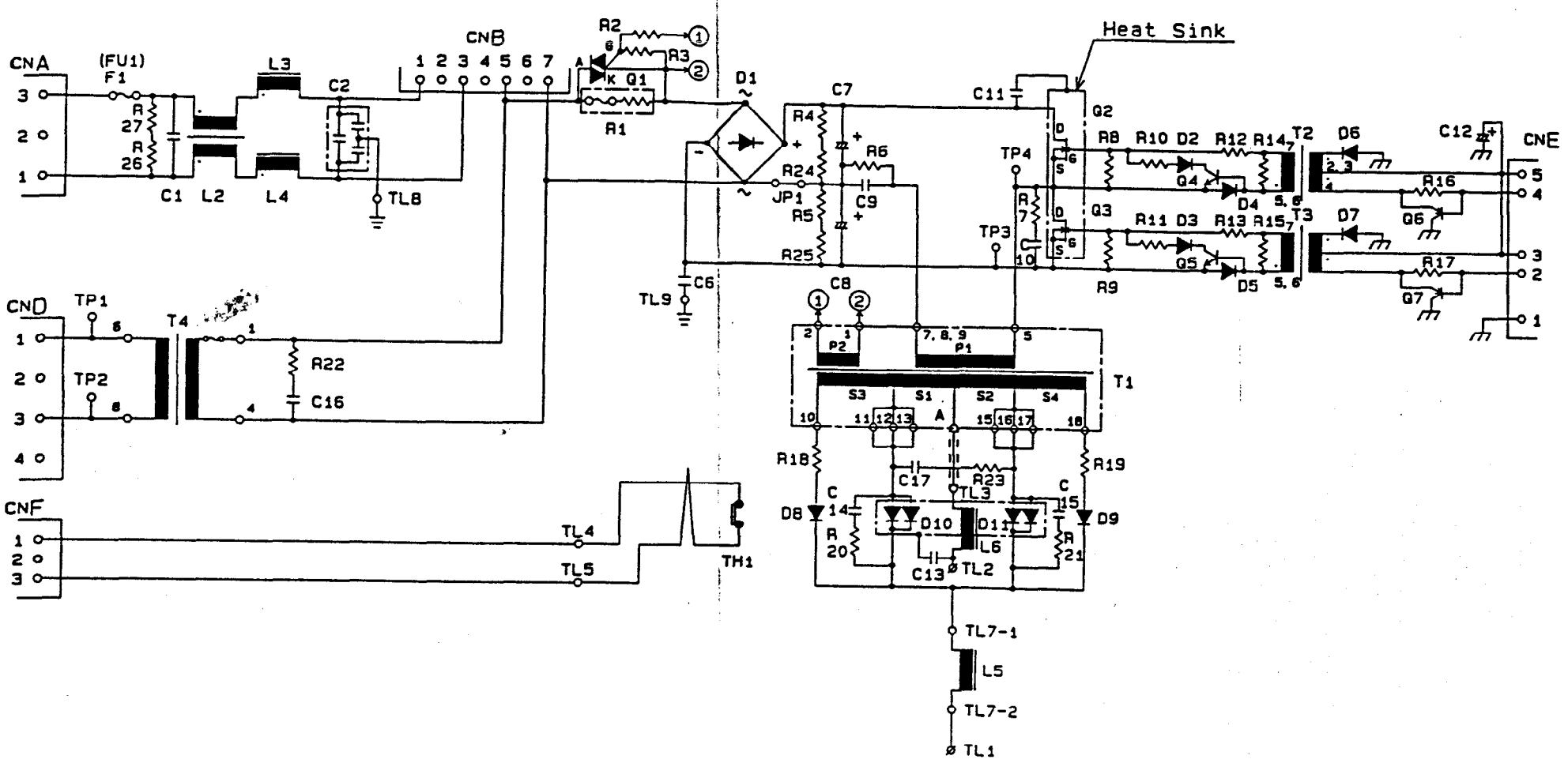

"A" indicates a leading line in T_1.

Fig. 18 POWER-PCB CIRCUIT DIAGRAM (For 100V)

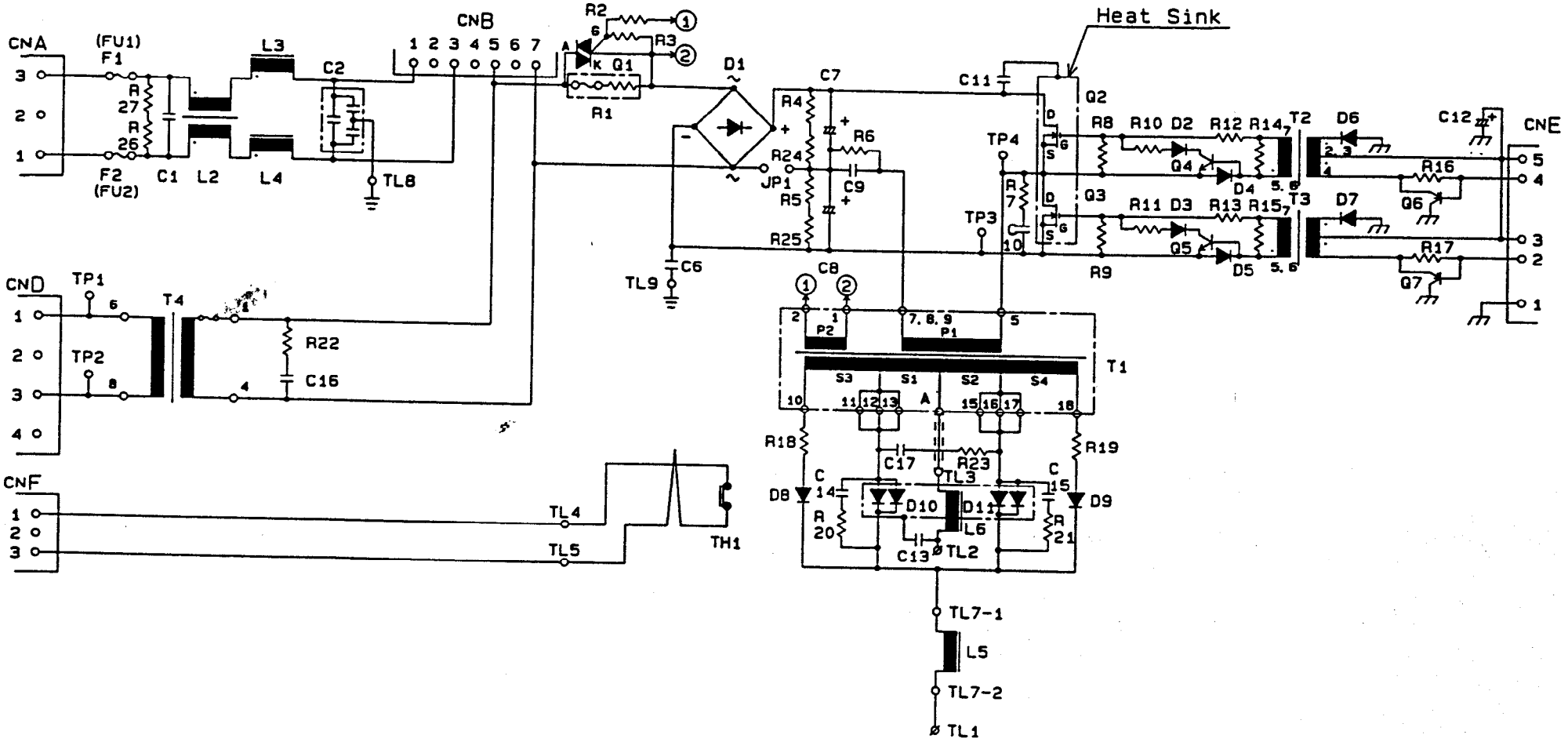

"A" indicates a leading line in T_1.

Fig. 19 POWER-PCB Circuit Diagram (For 200V)

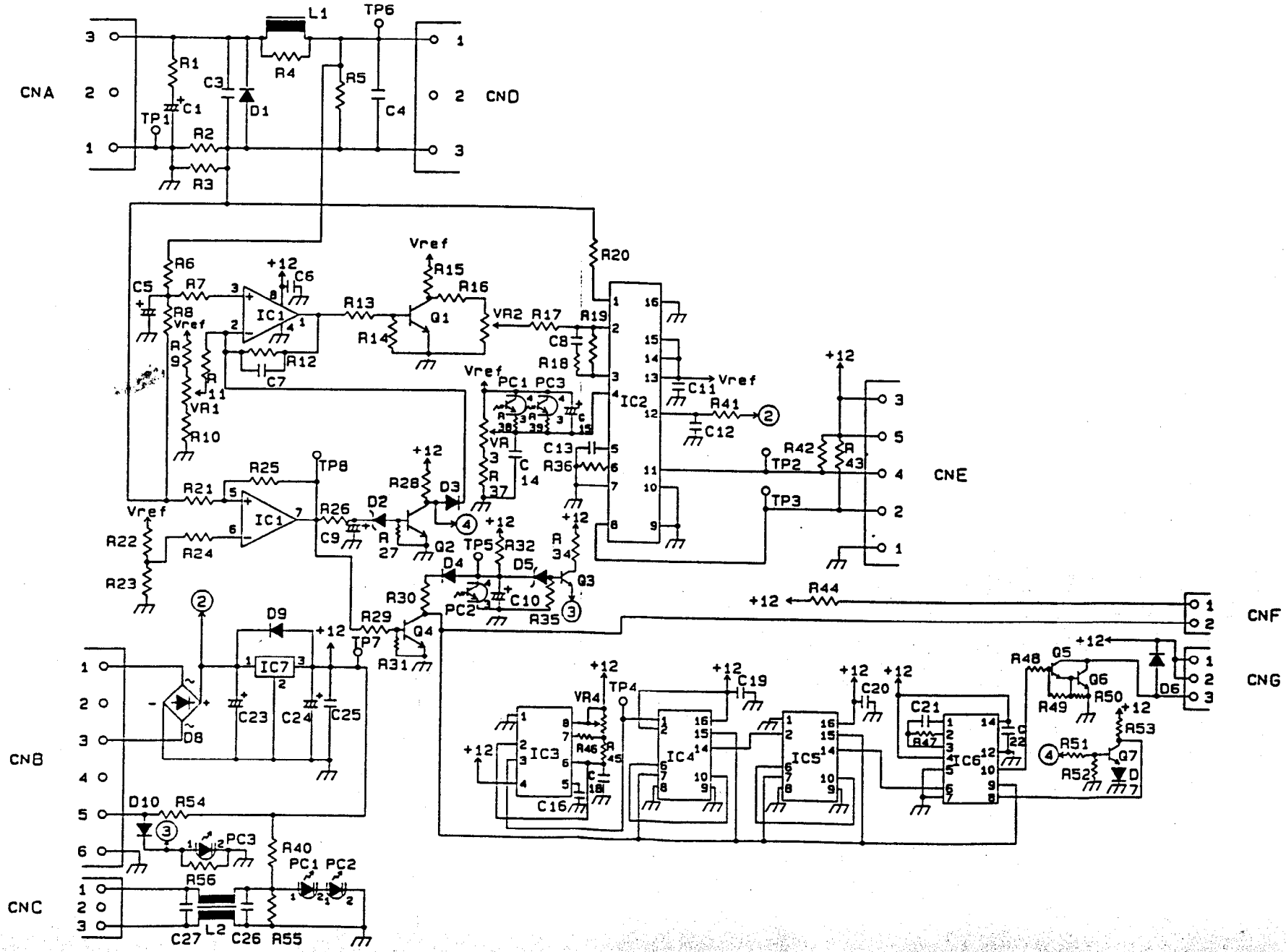

Fig. 20 Control-PCB CIRCUIT DIAGRAM

4 FUNCTION-BLOCK DIAGRAM

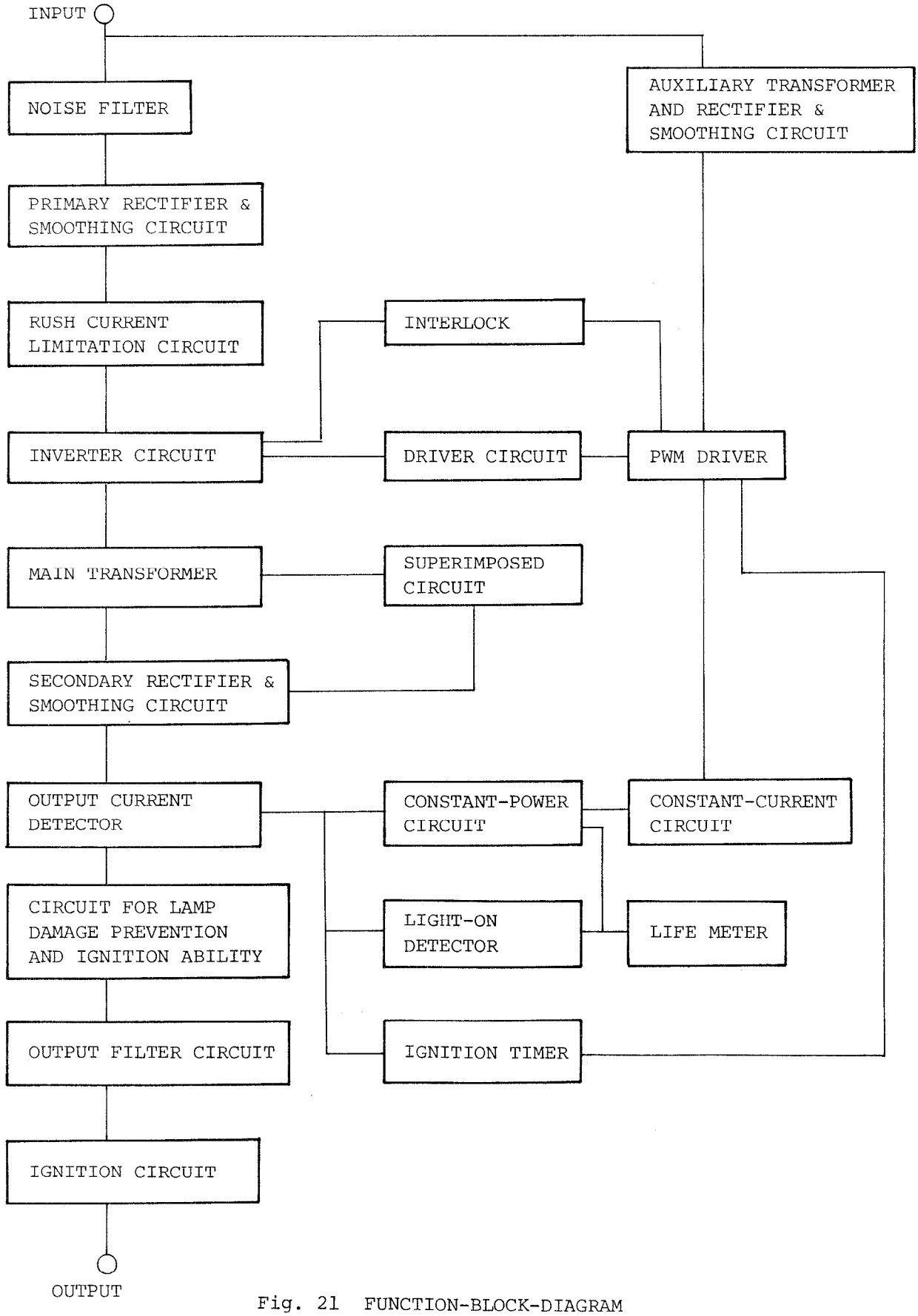

Fig. 21 FUNCTION-BLOCK-DIAGRAM

CONTENTS

1. GUIDE TO USE

- The troubleshooting is written in the flowchart form.
  You can find a defective part by following the arrows.

- [1] or [2] indicates a connector No. or a pin No. TP indicates a check pin. TP1 means a check pin 1.

- Only a multimeter should be used in this troubleshooting.

- "Measure the voltage between TP1 and TP2" means "Apply HOT to TP1 and GND to TP2 for measuring the voltage".

  GND → Reference potential in an electronic circuit, 0V.

  HOT → Supply voltage line is called "HOT" against "GND".

- (A) or (B) means "Jump to (A) or (B) in the same item". [A] means "Jump to [A] in another item".

- (a) or (b) means "Check method is given in (a) or (b) in the same item, and follow the method".

- For the replacement method, refer to "C. ASSEMBLY AND ADJUSTMENT PROCEDURES".

2. LAMP

2-1 LAMP is not lit

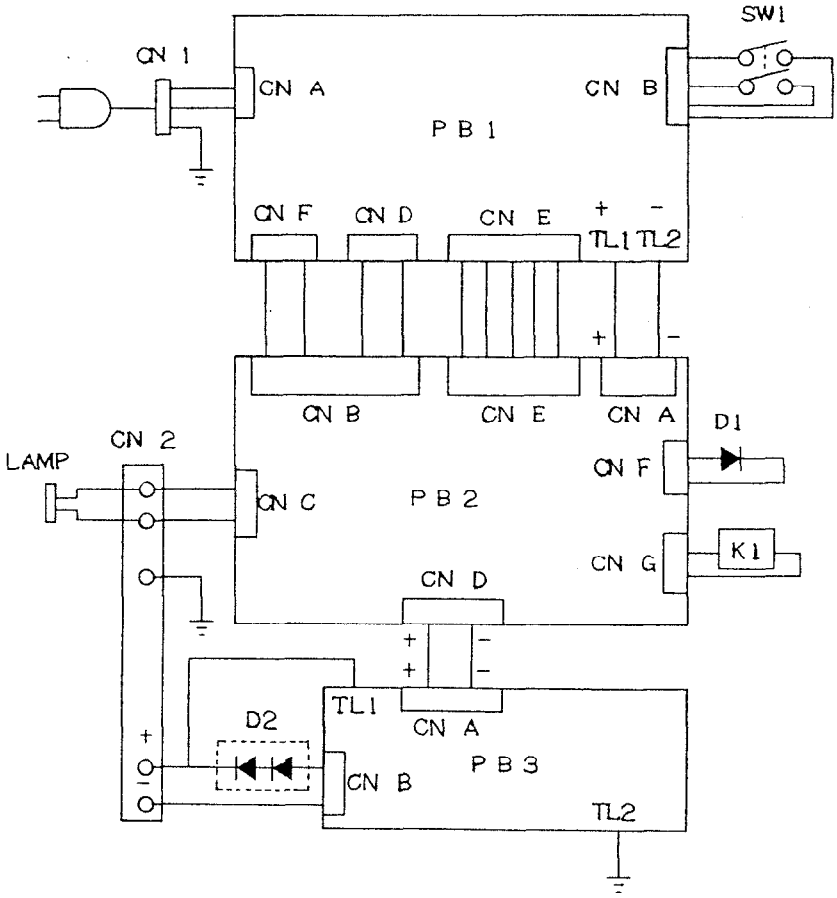

CAUSE
1. Defective lamp
2. Ambient temperature too high
3. Defective fuse F1 (100V) or F2 (200V)
4. Defective door switch
5. Defective MAIN-SW
6. Blocked slit for cooling
7. Defective INLET 100/200 ASS'Y
8. Defective OUTLET 100/200 ASS'Y
9. Defective HARNESS 1
10. Defective HARNESS 2
11. Defective POWER-PCB (PB1)
12. Defective CONTROL-PCB (PB2)
13. Defective IGNITION-PCB (PB3)

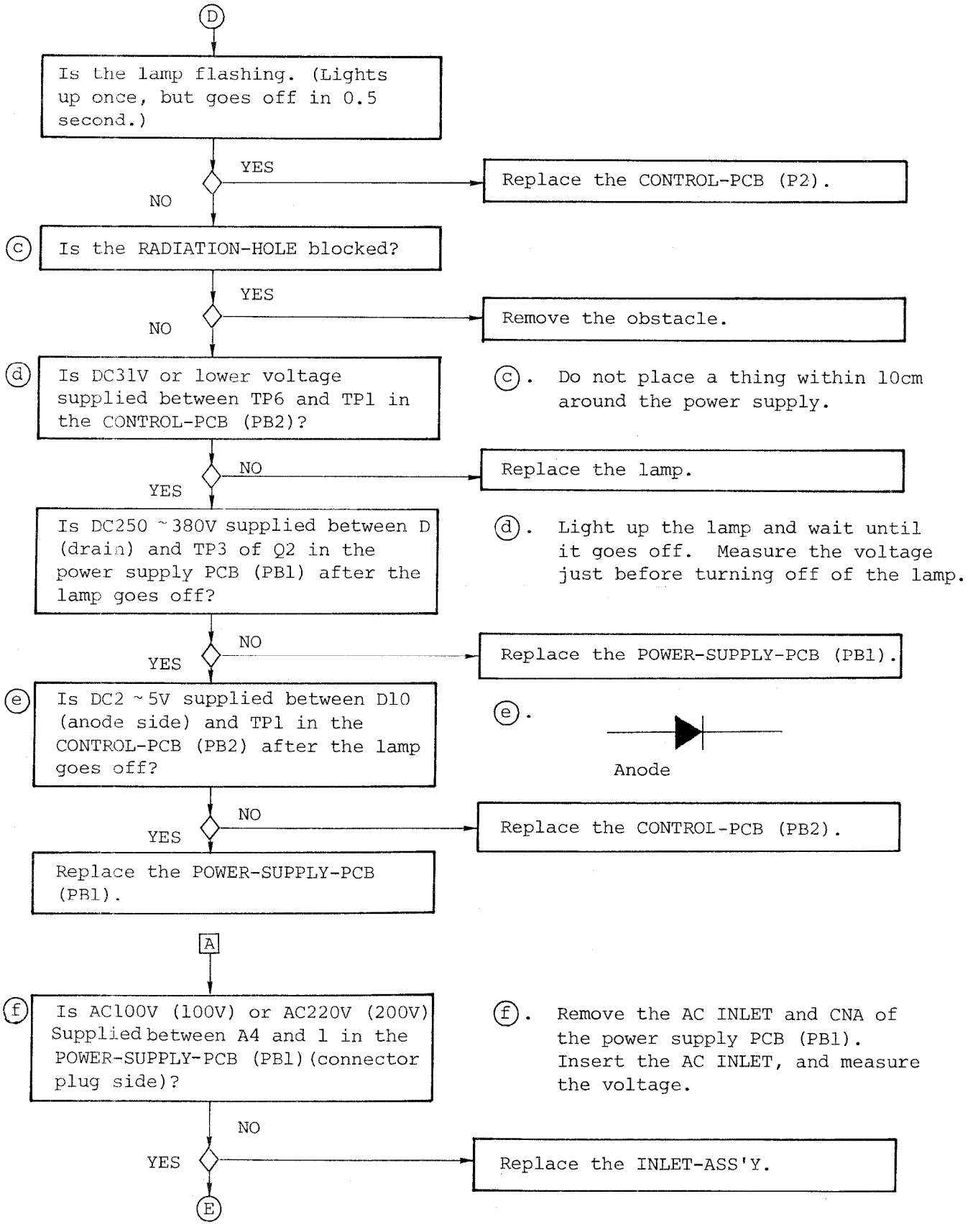
D
Is the lamp flashing. (Lights up once, but goes off in 0.5 second.)
YES
Replace the CONTROL-PCB (P2).
NO
c
Is the RADIATION-HOLE blocked?
YES
Remove the obstacle.
NO
d
Is DC31V or lower voltage supplied between TP6 and TP1 in the CONTROL-PCB (PB2)?
c. Do not place a thing within 10cm around the power supply.
NO
Replace the lamp.
YES
Is DC250 ~ 380V supplied between D (drain) and TP3 of Q2 in the power supply PCB (PB1) after the lamp goes off?
d. Light up the lamp and wait until it goes off. Measure the voltage just before turning off of the lamp.
NO
Replace the POWER-SUPPLY-PCB (PB1).
YES
e
Is DC2 ~ 5V supplied between D10 (anode side) and TP1 in the CONTROL-PCB (PB2) after the lamp goes off?
e.
Anode
NO
Replace the CONTROL-PCB (PB2).
YES
Replace the POWER-SUPPLY-PCB (PB1).
A
f
Is AC100V (100V) or AC220V (200V) Supplied between A4 and 1 in the POWER-SUPPLY-PCB (PB1) (connector plug side)?
f. Remove the AC INLET and CNA of the power supply PCB (PB1). Insert the AC INLET, and measure the voltage.
NO
YES
Replace the INLET-ASS'Y.
E

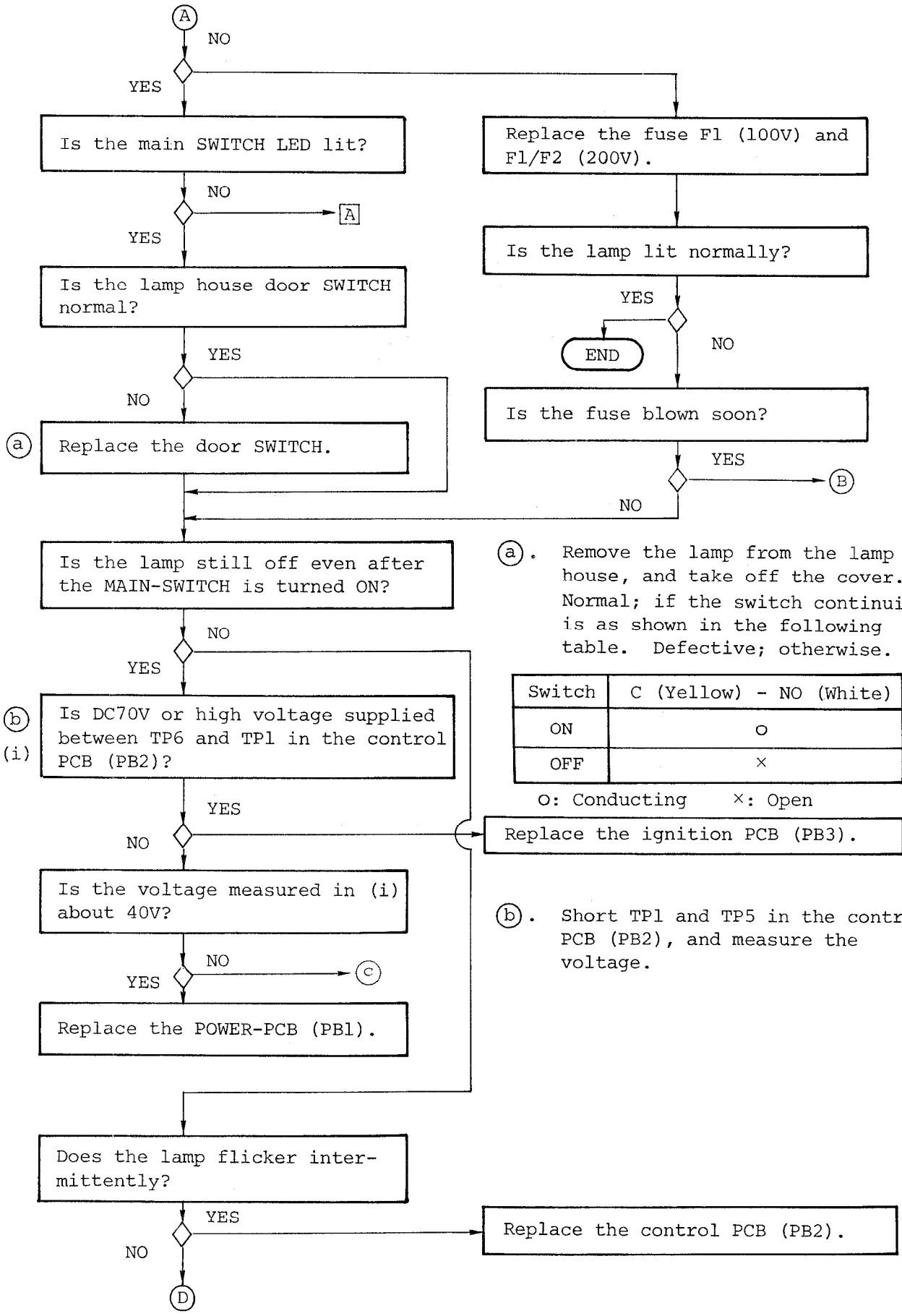

ⓐ. Remove the lamp from the lamp house, and take off the cover. Normal; if the switch continuity is as shown in the following table. Defective; otherwise.

Switch	C (Yellow) - NO (White)
ON	o
OFF	×

o: Conducting ×: Open

ⓑ. Short TP1 and TP5 in the control PCB (PB2), and measure the voltage.

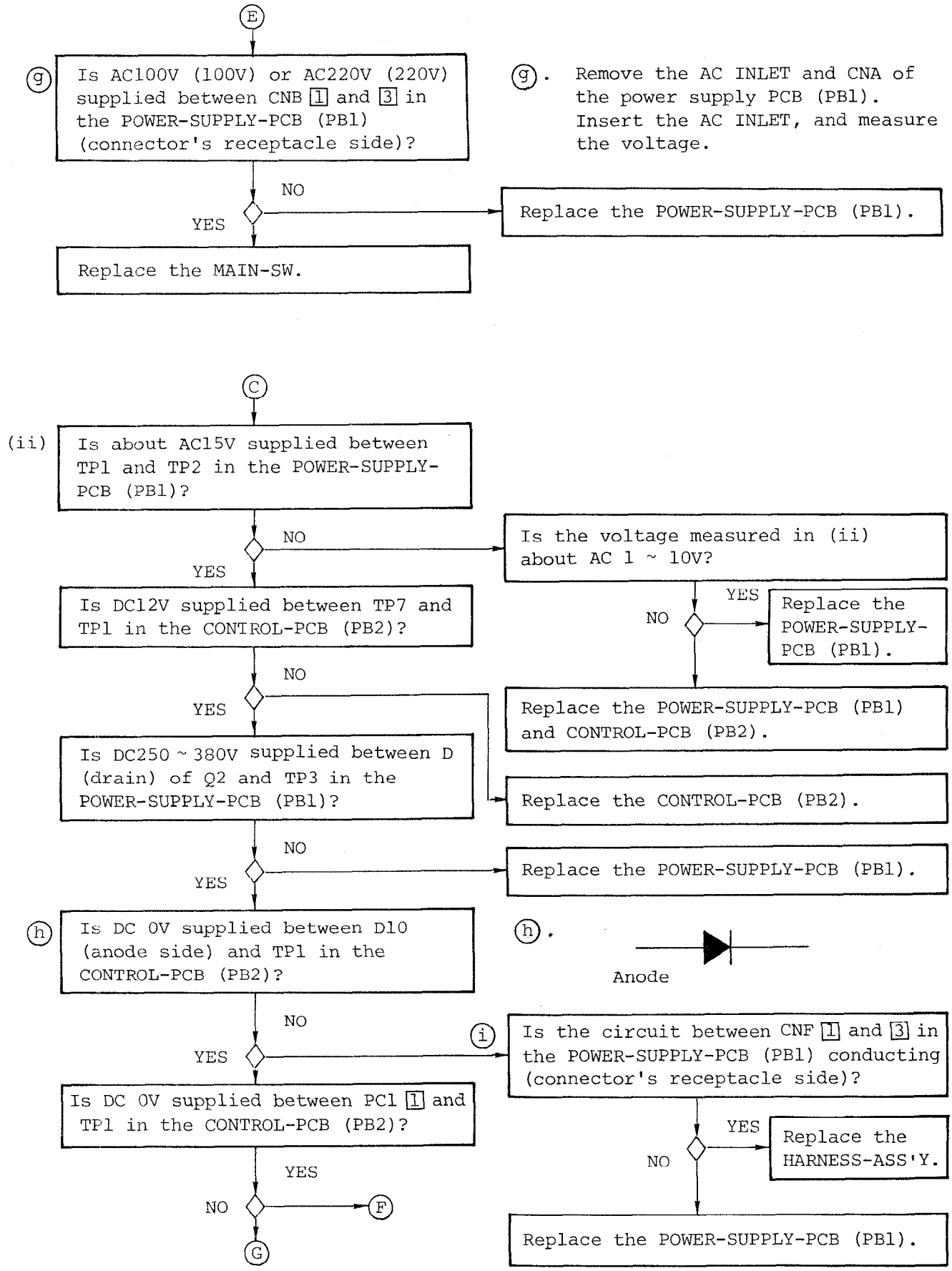
E
g
Is AC100V (100V) or AC220V (220V) supplied between CNB 1 and 3 in the POWER-SUPPLY-PCB (PB1) (connector's receptacle side)?
NO
YES
Replace the POWER-SUPPLY-PCB (PB1).
Replace the MAIN-SW.
g. Remove the AC INLET and CNA of the power supply PCB (PB1). Insert the AC INLET, and measure the voltage.
C
(ii)
Is about AC15V supplied between TP1 and TP2 in the POWER-SUPPLY-PCB (PB1)?
NO
YES
Is the voltage measured in (ii) about AC 1 ~ 10V?
YES
NO
Replace the POWER-SUPPLY-PCB (PB1).
Is DC12V supplied between TP7 and TP1 in the CONTROL-PCB (PB2)?
NO
YES
Replace the POWER-SUPPLY-PCB (PB1) and CONTROL-PCB (PB2).
Is DC250 ~ 380V supplied between D (drain) of Q2 and TP3 in the POWER-SUPPLY-PCB (PB1)?
Replace the CONTROL-PCB (PB2).
NO
YES
Replace the POWER-SUPPLY-PCB (PB1).
h
Is DC 0V supplied between D10 (anode side) and TP1 in the CONTROL-PCB (PB2)?
h.
Anode
NO
YES
i
Is the circuit between CNF 1 and 3 in the POWER-SUPPLY-PCB (PB1) conducting (connector's receptacle side)?
Is DC 0V supplied between PC1 1 and TP1 in the CONTROL-PCB (PB2)?
YES
NO
Replace the HARNESS-ASS'Y.
YES
NO
F
G
Replace the POWER-SUPPLY-PCB (PB1).

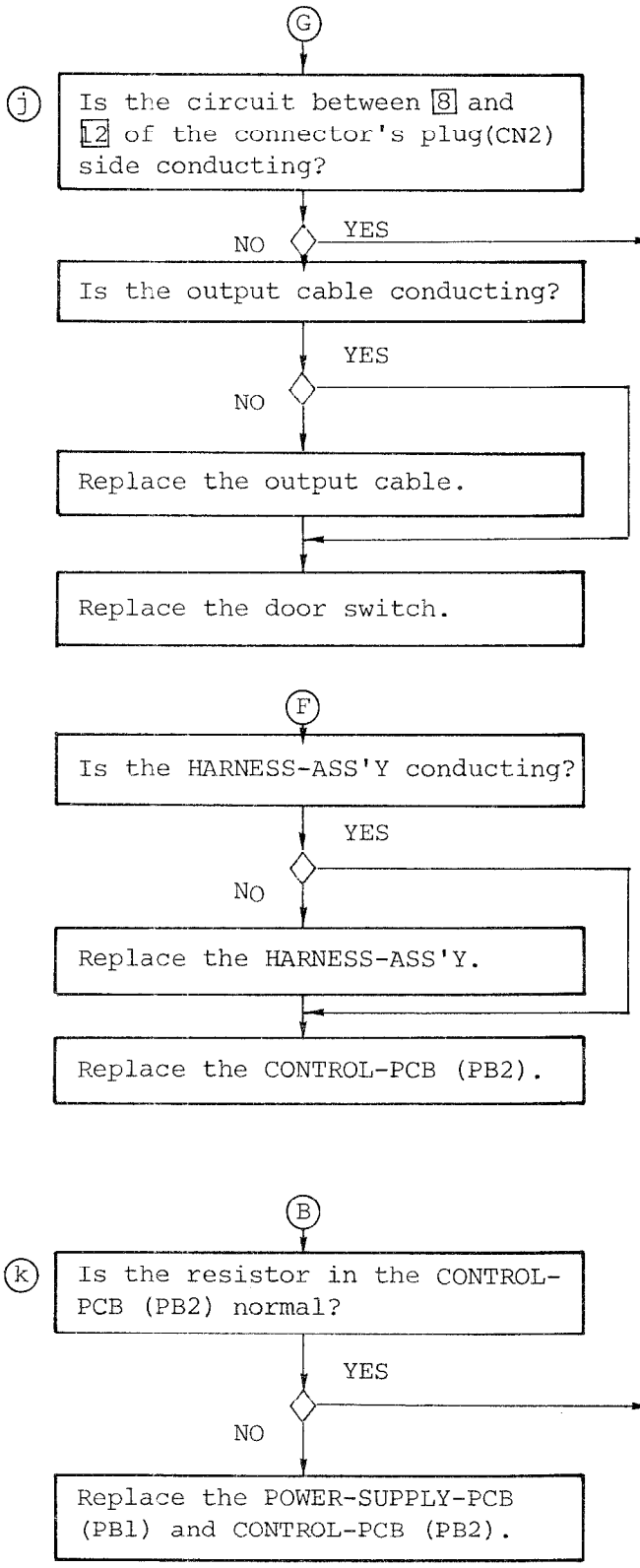

ⓘ. Disconnect CNF in the POWER-SUPPLY-PCB (PB1), and check.

ⓙ. Disconnect the TO LAMPHOUSE connector, and check.

Replace the OUTLET-ASS'Y.

ⓚ. Remove AC INLET. Normal; if the resistance value is as shown in the table below. Defective; otherwise.

	Resistance value
IC2 1 - TP1	1 ~ 3 KΩ
IC2 2 - TP1	3 ~ 6 KΩ

Replace the POWER-SUPPLY-PCB (PB1).

2-2 Lamp is too dark.

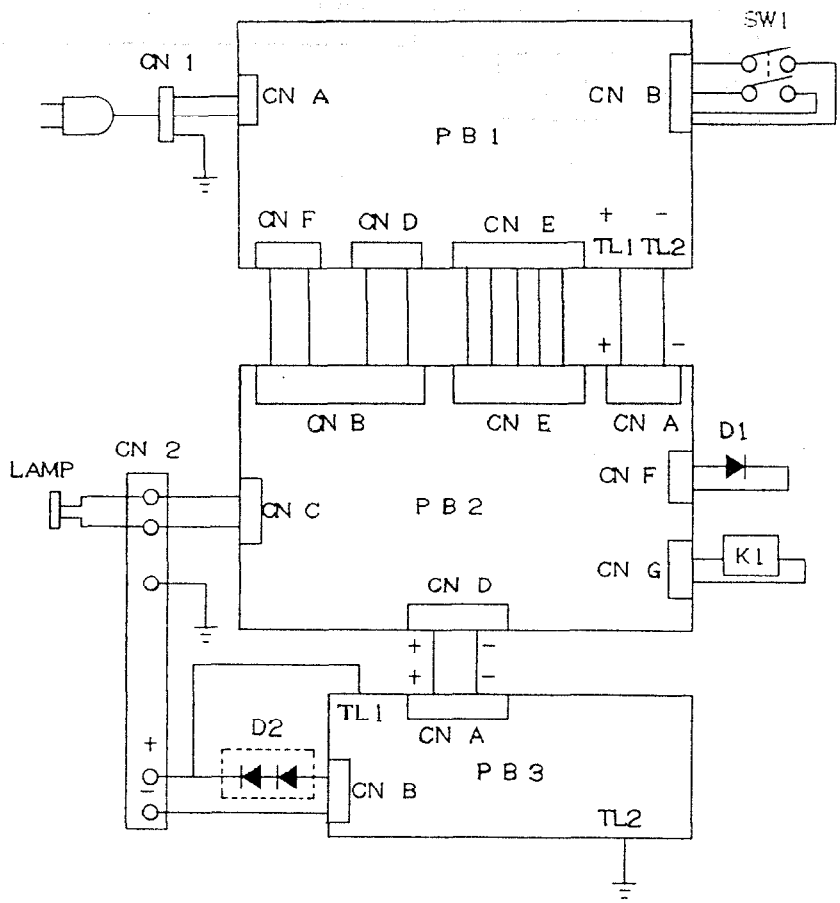

CAUSE
1. Defective lamp
2. Defective CONTROL-PCB (PB2)

ⓐ Is DC30V or higher voltage supplied between TP6 and TP1 in the CONTROL-PCB (PB2)?

YES → Replace the lamp.

NO → Check the load resistor according to 10-4 and 10-5 of "C. ASSEMBLY AND ADJUSTMENT PROCEDURES" No. C-7.

Ⓐ

ⓐ Light up the lamp with a multimeter lead applied to TP6 and TP1 in the CONTROL-PCB (PB2), and measure the voltage after 10 minutes.

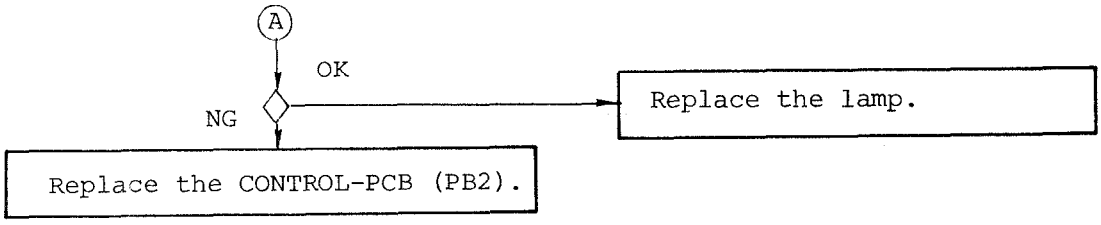
A
OK
NG
Replace the lamp.
Replace the CONTROL-PCB (PB2).

3. DISPLAY

3-1 Life meter does not function.

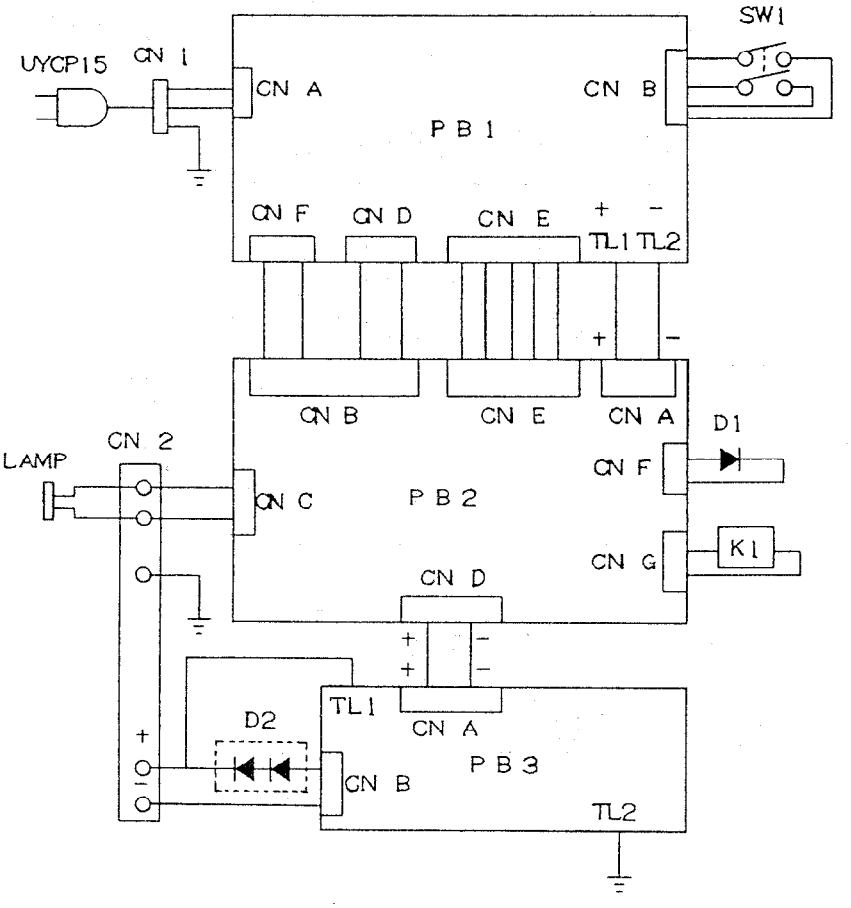

CAUSE
1. Defective counter ass'y 2. Defective control PCB (PB2) 3. Defective lamp

* Counter operation

① The counter (Life Meter) clicks about 0.5 ~ 1 second after the lamp is lit, and counts up one at every 6 minutes. If the counter functions immediately after the lamp is lit, and fails after about 6 minutes, replace the CONTROL-PCB (PB2). If the counter function but the operation time is extremely short or long, replace the CONTROL-PCB (PB2).

② If the counter reset button is pressed insufficiently, the counter character plate is caught causing failure in counting. In this case, press the reset button deeply to reset the counter display to "000.0".

3-2 BURNER ON LED is not lit.

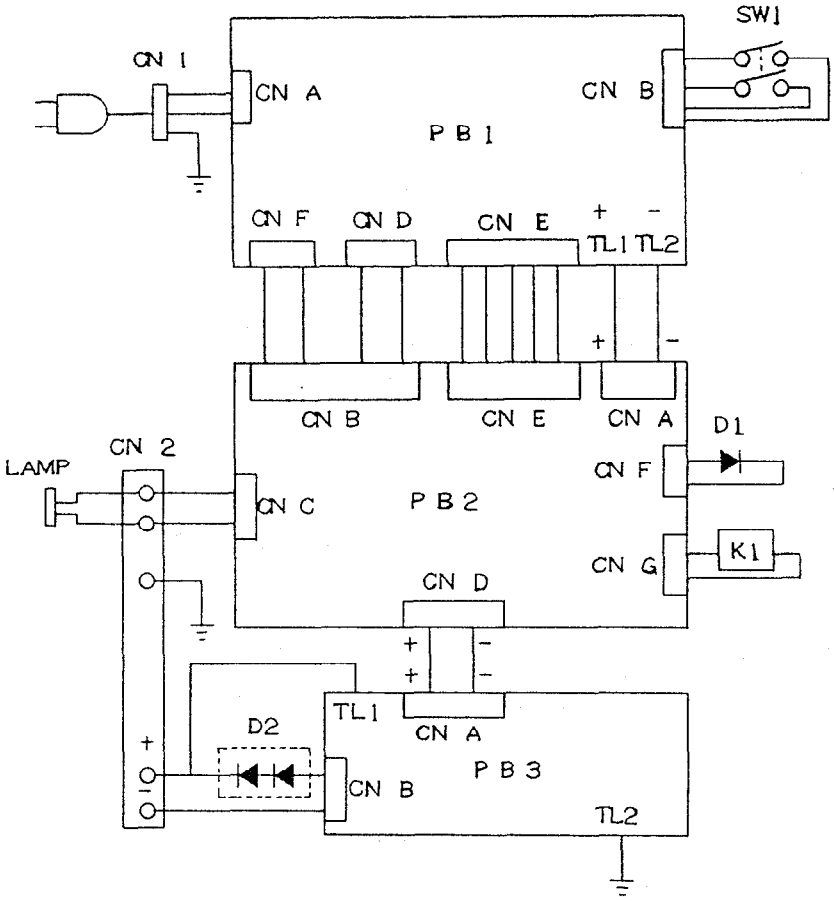

CAUSE
1. Defective LED-ASS'Y 2. Defective CONTROL-PCB (PB2) 3. Defective lamp

* LED operation

① BURNER ON LED is lit simultaneously with the lamp, and lighting continuously while the lamp is lighting. When the LED is too dark, replace the LED-ASS'Y.

* Caution

① Before touching the power supply inside or replacing the fuse, be sure to disconnect the AC INLET as well as turning off the power switch. Even with the main switch turned off, the supply voltage is supplied to the fuse.

② The ignition (PB3) generates high voltage (approx. 2kV) only when the lamp is lit. When the lamp is completely lit, the ignition stops automatically.

③ Pull out the connectors connected to the PCB by hand and verify that they are not loose or not disconnected.

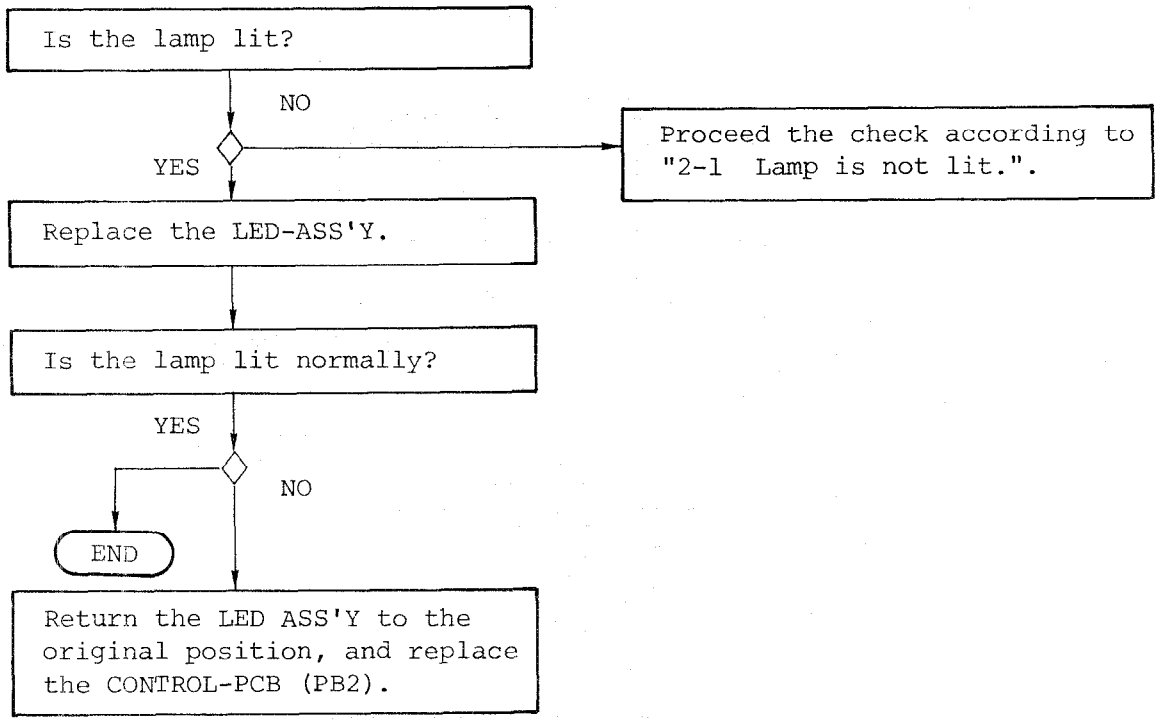

3-3 POWER LED is not lit.

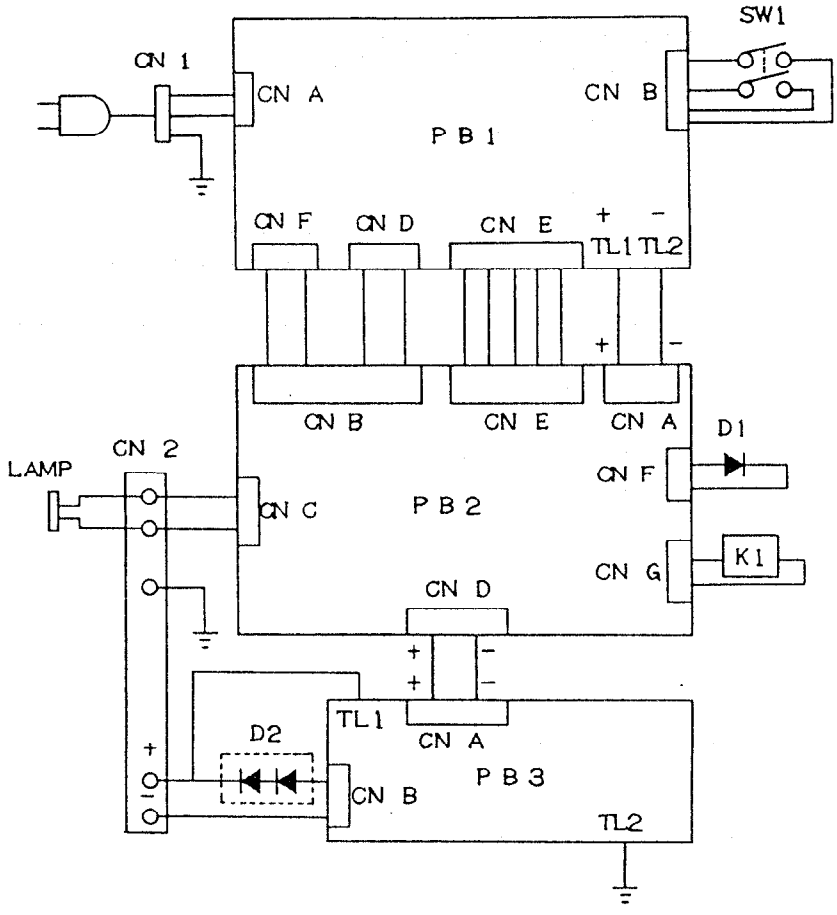

CAUSE
1. Defective main SW100 (100V) or SW200 (200V) 2. Defective power supply PCB (PB1) 3. Defective lamp

* POWER switch

① This switch turns on and off the input voltage to the power supply unit. The switch LED is lit when the power is supplied. Main SW ass'y is available for 100V and 200V. Use a correct one at replacement. If a wrong one is used, the switch LED is heated or dimmed. (Main SW100 for 100V and SW200 for 200V)

* Caution

① Before touching the power supply inside or replacing the fuse, be sure to disconnect the AC INLET as well as turning off the power switch. Even with the main switch turned off, the supply voltage is applied to the fuse.

② The ignition (PB3) generates high voltage (approx. 2kV) only when the lamp is lit. When the lamp is completely lit, the ignition stops automatically.

③ Pull out the connectors connected to the PCB by hand and verify that they are not loose or not disconnected.