B

REPAIR MANUAL
BOOK # 4b

BHA, B, C - F Repair

B-SUR, SVL, SHR STAGES

LIST OF Repair Tools
special Tools
Test Equipement + J-95
Grease

OLYMPUS SYSTEM MICROSCOPE

SERIES BH

REPAIR MANUAL

OLYMPUS

All right reserved by Olympus Optical Co., Tokyo

Printed in Japan

TO OLYMPUS MICROSCOPE SERVICING PERSONNEL

—— Prior to Repairing the BH Microscopes ——

As many in line of microscope repairs may have already been aware, the BH Microscope is considerably different in its mechanical construction from other Olympus biological microscopes such as EHT, FHT, etc. Accordingly the disassembly of the BH Microscope differs from other models.

Deliberate care has been taken in the design of the Model BH to facilitate its disassembly and reduce the adjustment time after the repair, which necessitates an increase of repair tools and jigs as listed at the end of this manual. You are requested not only to master the use of these instruments but also confirm which parts of the microscope under repair should be disassembled and which parts should not, by perusal of this booklet.

To mention some practical suggestions for microscope repairs:
A lot of screws used in this model have been cemented in position with various adhesives to prevent them from loosening in transit, etc. If it is necessary to remove screws for repair, look at their heads and ascertain whether they are cemented with what kind of adhesive. You may be able to identify adhesives by their outside coloring and choose the best way to remove.

a) "ARALDITE", tinted with white and translucent, requires heating before loosening screws with a screwdriver.

b) "NEJI-LOCK" is slightly red. Screws cemented with "NEJI-LOCK" are removable with a screwdriver. If not, apply heat slightly before unscrewing.

c) "SHELLAC" is brown. Shellacked screws are removable with a screwdriver. If not, moisten them with alcohol.

d) "HIGH SUPER" (cemedine), tinted with white, requires heating before loosening screws.

e) "PLIOBOND", sober yellow, requires a small amount of mixture (alcohol and ether) to loosen screws.

Other Requisites for Repairs:

1) First of all, ascertain what parts of the microscope the user or owner of which wishes you to repair.

2) Never fail to check the entire function of the microscope before you commence its repair.
   2-1) Find out what parts are defective and how much they are damaged.
   2-2) Prior to repair, think of the best possible order of disassembling the defective parts in a most efficient way.

3) After completing the repair, check the functions of not only the re-assembled parts but also the entire microscope to make sure no defect should be left unremedied.

4) Be careful not to deform repair parts during the assembly; make it practice to use tools and jigs specified for purpose.

5) Make repairs promptly and accurately.

TABLE OF CONTENTS

1.	Microscope Stands BHA-F, BHB-F and BHC-F	5
1-1	Disassembly and Adjustment of Coarse and Fine Adjustment Knobs	5
1-2	Adjustment of Backlash in Fine Focus	12
1-3	Horizontal Adjustment of Stage Surface	14
1-4	Adjustment of Condenser Holder	14
1-5	Replacement of Light Exit Lens and Field Iris Diaphragm	20
1-6	Hand Rest Replacement	22
1-7	Adjustment of High/Low Magnification Selector Lever (for BHA and BHB)	23
1-8	Replacement of Collector Lens B-CLC (for BHC)	26
1-9	Replacement of Lamp House B-LH (for BHA and BHB)	26
1-10	Mirror Replacement	27
1-11	Disassembly of Electric Equipment B-BDA or B-BDC	29
2.	Observation Tubes B-BI and B-TR	32
2-1	Disassembly of Observation Tubes	32
2-2	Assembly and Adjustment of Binocular Tube	34
2-3	Adjustment of Trinocular Tube	39
3.	Stage with Low Drive Controls B-SVR and B-SVL	42
3-1	Adjustment of North-South and East-West Drive Controls	42
3-2	Adjustment of East-West and North-South Drive Controls	45
3-3	Adjustment of North-South Drive Control Guides	48
3-4	Adjustment and Replacement of Other Parts	49
4.	Stage with Horizontal Drive Controls B-SHR	52
4-1	East-West Drive Control	52
4-2	Adjustment of North-South Drive Controls	56
4-3	Adjustment of Stage Rotation	59
5.	Lubrication List	60
6.	List of Repair Tools and Jigs for All Olympus Microscopes	62
6-A	Regular Tools	62
6-B	Special Tools	62
6-C	Test Equipments and Jigs for Optical Alignment	62
6-D	For BH Microscopes Only	63
6-E	Grease	64

Block Diagram of System Microscope Series BH

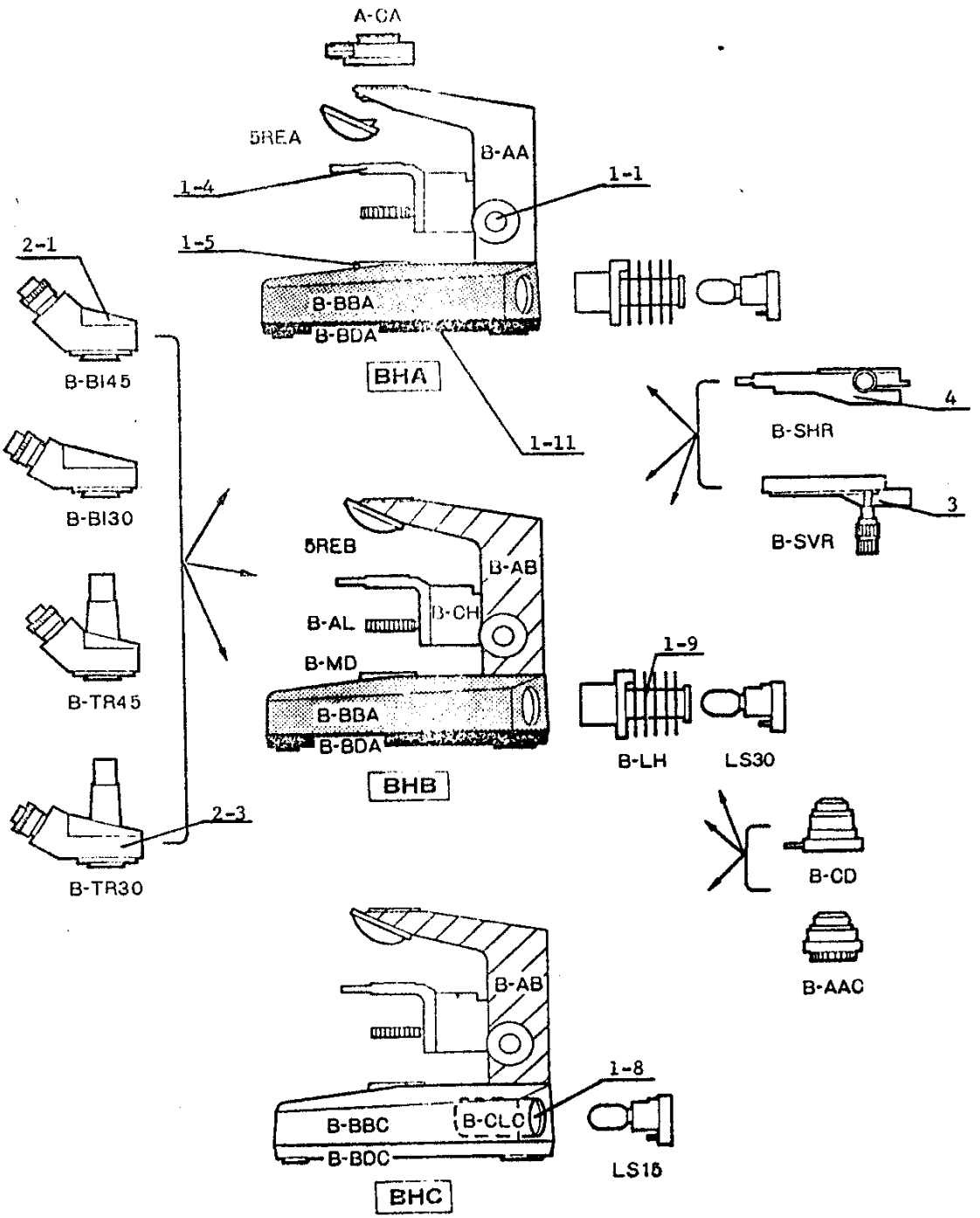

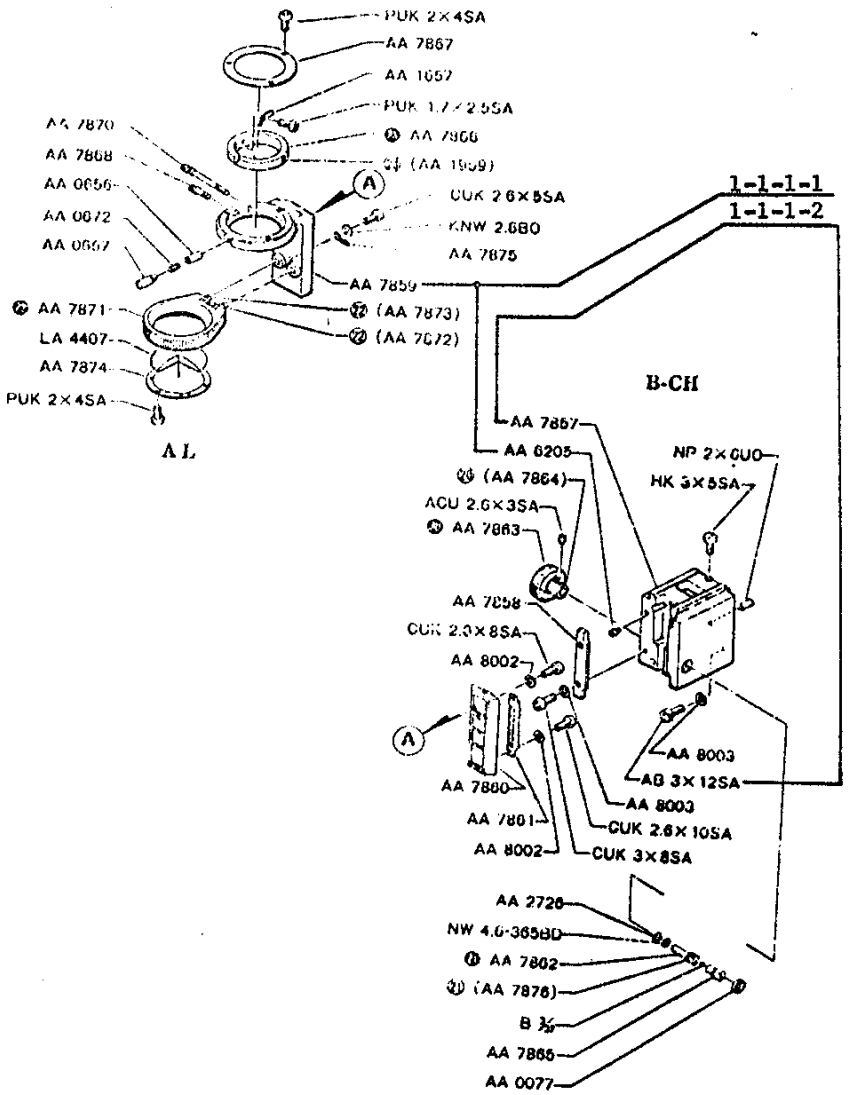
PUK 2×4SA
AA 7867
AA 1057
PUK 1.7×2.5SA
AA 7866
(AA 1909)
AA 7870
AA 7868
AA 0656
AA 0672
AA 0667
CUK 2.6×5SA
KNW 2.6BO
AA 7875
AA 7859
AA 7871
(AA 7873)
(AA 7072)
LA 4407
AA 7874
PUK 2×4SA
A L
1-1-1-1
1-1-1-2
B-CH
AA 7867
AA 6205
(AA 7864)
ACU 2.6×3SA
AA 7863
NP 2×6UO
HK 3×5SA
AA 7858
CUK 2.6×8SA
AA 8002
AA 8003
AB 3×12SA
AA 7880
AA 8003
AA 7881
CUK 2.6×10SA
AA 8002
CUK 3×8SA
AA 2726
NW 4.6-36580
AA 7862
(AA 7876)
B
AA 7865
AA 0077

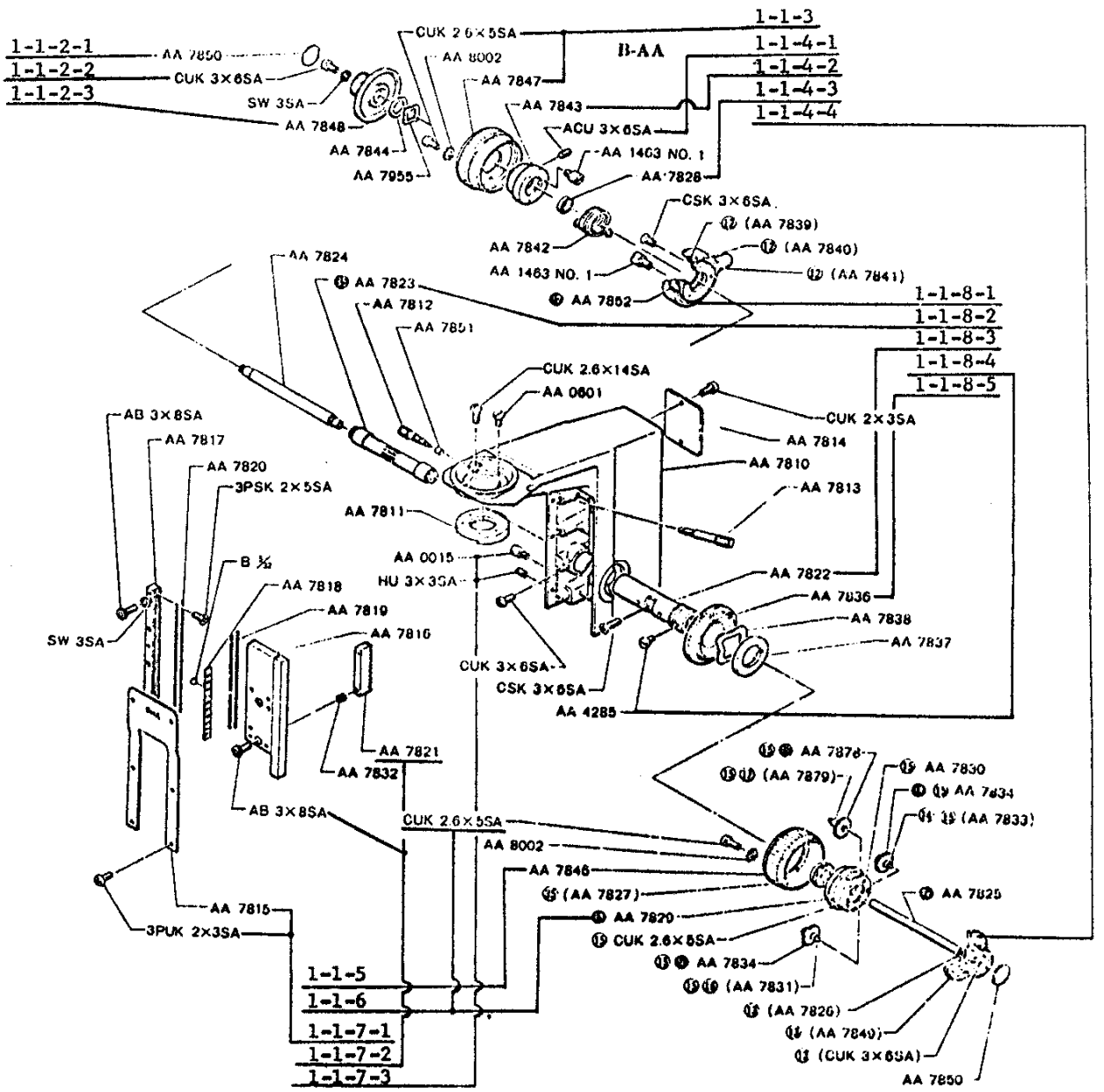

1-1-2-1
1-1-2-2
1-1-2-3
AA 7850
CUK 3×6SA
SW 3SA
AA 7848
AA 7844
AA 7955
CUK 2.6×5SA
AA 8002
AA 7847
AA 7843
ACU 3×6SA
AA 1463 NO. 1
AA 7828
B-AA
1-1-3
1-1-4-1
1-1-4-2
1-1-4-3
1-1-4-4
CSK 3×6SA
(AA 7839)
(AA 7840)
(AA 7841)
AA 7842
AA 1463 NO. 1
AA 7852
AA 7824
AA 7823
AA 7812
AA 7851
1-1-8-1
1-1-8-2
1-1-8-3
1-1-8-4
1-1-8-5
CUK 2.6×14SA
AA 0601
CUK 2×3SA
AA 7814
AA 7810
AA 7813
AB 3×8SA
AA 7817
AA 7820
3PSK 2×5SA
AA 7811
AA 0015
HU 3×3SA
AA 7822
AA 7836
AA 7838
AA 7837
B 3/32
AA 7818
AA 7819
AA 7816
SW 3SA
CUK 3×6SA
CSK 3×6SA
AA 4285
AA 7821
AA 7832
AB 3×8SA
AA 7878
(AA 7879)
AA 7830
AA 7834
(AA 7833)
CUK 2.6×5SA
AA 8002
AA 7846
(AA 7827)
AA 7820
CUK 2.6×5SA
AA 7834
(AA 7831)
(AA 7826)
(AA 7849)
(CUK 3×6SA)
AA 7850
AA 7825
AA 7815
3PUK 2×3SA
1-1-5
1-1-6
1-1-7-1
1-1-7-2
1-1-7-3

1. Microscope Stands BHA-F, BHB-F and BHC-F

1-1	Disassembly and Adjustment of Coarse and Fine Adjustment Knobs.	
1-1-1	Remove Condenser Holder B-CH.	
1-1-1-1	Remove Stopper AA6205 so that Condenser Holder can be pulled out.	
1-1-1-2	Remove Metal Block AA7857 (four AB3x12 SA) from the stand.	
1-1-2	Remove Fine Adjustment Knobs.	
1-1-2-1	Remove Plate AA7850 on the left hand with a screwdriver.	Tool: Screwdriver No. 1 (Small size)
1-1-2-2	Remove Screw CUK3x6SA on left hand side.	
1-1-2-3	Remove Knob AA7848.	
1-1-3	Remove Knob AA7847 (three screws CUK2.6x5) from left side.	
1-1-4	Remove Bearing AA7843.	
1-1-4-1	Loosen two screws ACU3x6.	
1-1-4-2	Holding Bearing AA7843 steady with a pair of pliers, rotate Coarse Adjustment Knob AA7846 on the other side counter-clockwise and Bearing will come off with ease.	Tool: Pliers
1-1-4-3	Holding Nut AA7828 with Tool B-KK-071, rotate Coarse Adjustment Knob AA7846 counter-clockwise until the nut drops off.	Tool: B-KK-071
1-1-4-4	Pull out Knob AA7849 from the right side.	Be careful not to scratch the shaft.
1-1-5	Pull out the right-hand Knob AA7846, including Gear Box and Shaft.	
1-1-6	Remove Gear Box AA7829 from the right-hand Knob AA7846 (three CUK2.6x5).	Avoid disassembly of the shaft and gear box as much as possible, because they are cemented together.
1-1-7	Disassemble Ball Guide.	
1-1-7-1	Remove Front Cover AA7815 (six 3PUK2x3).	
1-1-7-2	Remove Rack AA7821 (two AB3x8).	
1-1-7-3	Remove Stop Screw AA0015 of Clamping Lever AA7852 on the left hand side of the arm, and loosen three screws HU3x3SA which are provided for adjustment of Outer Guide AA7817.	
1-1-7-4	Place the microscope stand on the support frame B-KU-033 with its right side facing downward. See 1-1-18-1.	

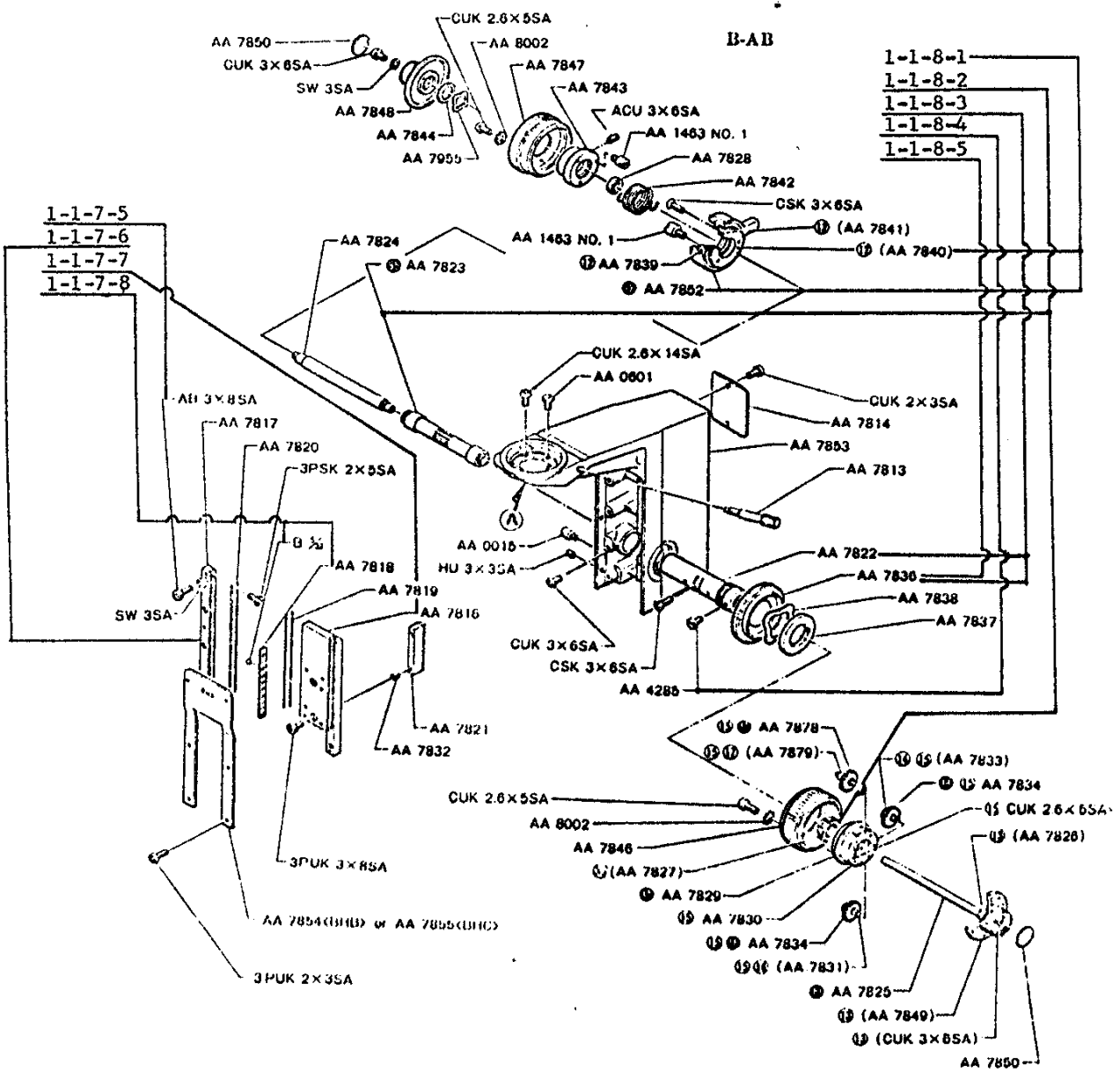
B-AB
CUK 2.6×5SA
AA 7850
AA 8002
CUK 3×6SA
AA 7847
SW 3SA
AA 7843
AA 7848
ACU 3×6SA
AA 7844
AA 1463 NO. 1
AA 7955
AA 7828
AA 7842
CSK 3×6SA
(AA 7841)
(AA 7840)
AA 1463 NO. 1
AA 7824
AA 7823
AA 7839
AA 7852
1-1-8-1
1-1-8-2
1-1-8-3
1-1-8-4
1-1-8-5
1-1-7-5
1-1-7-6
1-1-7-7
1-1-7-8
CUK 2.6×14SA
AA 0601
CUK 2×3SA
AA 7814
AA 7853
AA 7813
AA 7817
AA 7820
3PSK 2×5SA
AA 0016
HU 3×3SA
AA 7822
AA 7836
AA 7838
AA 7837
AA 7818
AA 7819
AA 7816
SW 3SA
CUK 3×6SA
CSK 3×6SA
AA 4285
AA 7821
AA 7832
AA 7878
(AA 7879)
(AA 7833)
AA 7834
CUK 2.6×5SA
AA 8002
AA 7846
(AA 7827)
AA 7829
AA 7830
AA 7834
(AA 7831)
AA 7825
(AA 7849)
(CUK 3×6SA)
AA 7850
3PUK 3×8SA
AA 7854(DHD) or AA 7855(DHC)
3PUK 2×3SA

1-1-7-5	Remove four screws AB3x8SA on the left side of Outer Guide AA7817.	
1-1-7-6	Remove Outer Guide AA7817.	
1-1-7-7	Remove Inner Guide AA7816.	Take care not to disperse balls when removing Inner Guide.
1-1-7-8	Remove balls and Casing AA7818 together.	
1-1-7-9	Set up the stand.	
1-1-8	Disassemble Pinion Shaft.	
1-1-8-1	Remove Clamping Lever AA7852 with ring AA7840.	
1-1-8-2	Pull out Pinion AA7823 and Gear AA7827.	
1-1-8-3	Remove Bearing AA7822 and Tension Adjustment Ring AA7836 (two CUK3x6 and one CSK3x6).	
1-1-8-4	Remove Cd-screw AA4285.	
1-1-8-5	Rotate Knob AA7836 counter-clockwise into the bearing until it comes off.	
1-1-9	Clean each component and replace if defective.	
1-1-10	Start re-assembly and alignment as follows:	
1-1-11	Attach Stop Screw AA4285 to Pinion Bearing AA7822 and screw in Knob AA7836 after greasing the thread with E-3.	Tool: B-KU-032, E-3
1-1-12	Attach Pinion Bearing to the arm.	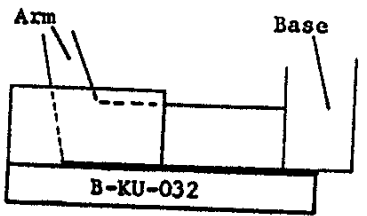 1-1-12 The support frame B-KU-032 is recommended for this attachment.
1-1-13	Attach the clamping unit AA7852 to the upper limit of coarse adjustment range.	
1-1-13-1	Insert Ring AA7840.	
1-1-13-2	Screw in Clamping Lever AA7852 with grease E-3 on the thread.	Grease: E-3
1-1-13-3	After clamping the lever, attach Stop Screw AA0015 at the left side of the arm.	
1-1-14	Assemble the pinion.	
1-1-14-1	Screw in Tension Adjustment Ring AA7836 all the way.	
1-1-14-2	Apply grease to Spring AA7838 and assemble it.	
1-1-14-3	Apply grease to Washer AA7837 and assemble it.	Grease: E-3

1-1-14-4	Apply grease to the outside surface of the pinion shaft and assemble it.	
1-1-14-5	Apply grease to Nut AA7828 and screw it into the left hand side of pinion with hand.	It will be later retightened with a pin-face spanner. (B-KK-071)
1-1-15	Assemble Coarse Adjustment Knobs.	
1-1-15-1	Apply grease E-6 and assemble the right hand knob AA7846, including gear box and shaft.	
1-1-15-2	Assemble the right hand Fine Adjustment Knobs AA7849. Lock Ring AA7841 with locking lever AA7852.	
1-1-15-3	Holding Nut AA7828 with Pin-face Spanner B-KK-071 steady, tighten right-hand Coarse Adjustment Knob AA7846.	
1-1-15-4	Apply shellac to pinion and nut.	Tool: Shellac
1-1-15-5	Hook Spring AA7842 on HK screw AA1463 of Ring AA7841.	
1-1-15-6	Hook the other end of spring on HK screw AA1463 of Bearing AA7843.	
1-1-15-7	Rotate the bearing through 360° in the coiling direction of spring so that the bearing is just over HK screw of Ring AA7841; then holding Bearing AA7843 with pliers rotate the Coarse Adjustment Knob AA7846 on the opposite side until Bearing AA7843 is completely screwed in.	Ascertain that by loosening the locking lever the spring-loaded ring (clutch) returns to original position and stops at HK screw of the bearing. Confirm it by any means, for instance, by listening to the sound or touch, etc.
1-1-15-8	Clamp the bearing with two screws ACU3x6.	
1-1-15-9	Attach the left hand Coarse Adjustment Knob with three screws CUK2.6x5.	
1-1-16	Check the function of Coarse Adjustment Knob.	1) The tension adjustment ring must be effective in controlling tension of coarse adjustment knobs. 2) Coarse Adjustment Knobs should operate freely and smoothly. 3) Take care not to permit play in right and left coarse adjustment knobs while assemblying them.
1-1-17	Assemble Fine Adjustment Knobs.	
1-1-17-1	Apply grease E-3 to Spring, Washer AA7955 and assemble it.	Grease: E-3
1-1-17-2	Assemble Washer AA7844.	
1-1-17-3	Assemble the left-side Fine Adjustment Knob.	
1-1-17-4	Secure it with Washer and CUK Screw.	Do not tighten the CUK screw too much at this stage, because as you tighten it, the fine adjustment knobs will be clamped.

1-1-18 Assemble Ball Guide.

1-1-18-1 Place the microscope stand on the support frame B-KU-033, with its right side facing downward.

1-1-18-2 Apply grease E-5 to the groove on the right-side Outer Guide. (AA7817)

1-1-18-3 Put Casing AA7818 on groove.

1-1-18-4 Insert ten balls.

1-1-18-5 Grease the groove of Inner Guide and assemble it.

1-1-18-6 Put Casing on it.

1-1-18-7 Insert ten balls.

Tool: B-KU-033

Grease: E-5

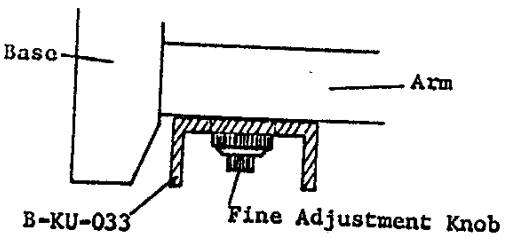

1-1-18

For easier assembly, insert Inner Guide, inclining it.

1-1-18-8 Grease the groove of Outer Guide and assemble it.

1-1-18-9 Clamp Outer Guide with four screws AB3x8 lightly.

1-1-18-10 Remove the stand from the support frame and place it upright.

1-1-18-11 Attach Rack AA7821 to Inner Guide AA7816 with two screws AB3x8.

This procedure can be carried out in the following manner: First insert the rack into behind the inner guide AA7816 through the opening over the guide, then pressing the rack against the back of the inner guide with the tip of your left index finger, move the rack downward so that a tapped hole of the rack can be seen through the hole of the inner guide. As you rotate the right-side Coarse Adjustment Knob AA7846, the rack and pinion are engaged with each other.

1-1-19 Adjust Casing.

1-1-19-1 Loosen Tension Adjustment Ring.

1-1-19-2 By manually sliding the Inner Guide throughtout the working range from top to bottom, equally divide the working range to avoid its stopping midway.

1-1-20 Adjust Outer Guide.

1-1-20-1 Temporarily Clamp four screws AB3x8 on the left-side Outer Guide evenly.

1-1-20-2 Clamp three screws HU3x3 on the left side of the arm gradually.

1-1-20-3 Clamp three screws evenly.

Make sure that a ball is positioned under each screw HU3x3 when clamped.

1-1-20-4 Attach jig B-KU-035 to Inner Guide and adjust three screws in such a manner that the jig moves down all the way with proper tension.

1-1-20-5 "Proper tension" means that Inner Guide with Jig B-KU-035 on it descends very slowly.

1-1-20-6 Clamp screws AB3x8 tightly.

1-1-20-7 Check for play between Guides by rocking the jig.

1-1-20-8 Repeat the above adjustment until Inner Guide moves smoothly without any play or tightness.

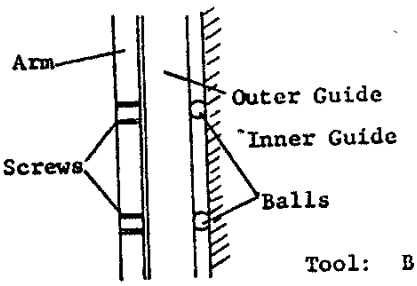

Tool: B-KU-035

1-1-20-2

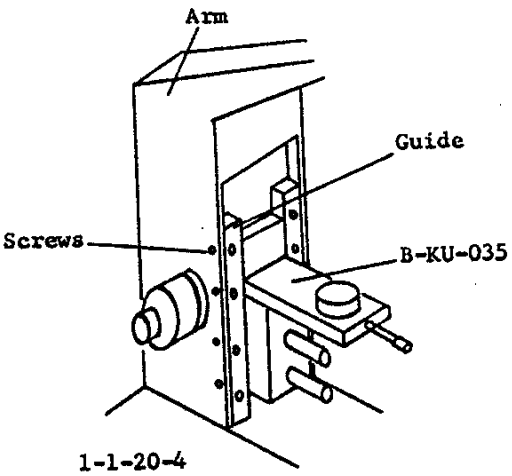

1-1-20-4

1-1-20-9 Apply shellac to heads of screws AB3x8 and HU3x3.

Tool: Shellac

1-1-21 Assemble Cover AA7815.

1-1-22 Attach Plate AA7850 to Fine Adjustment Knob with a small amout of adhesive (e.g. Pliobond).

1-1-23 Assemble Condenser Holder B-CH.

See 1-3-1.

1-2 Adjustment of Backlash in Fine Focus

1-2-1 Without Jig B-KN-001

1-2-1-1 Focus on an object with Objective 100X and Eyepiece 10X (by rotating Fine Adjustment Knob clockwise, for instance).

Tools: Obj. 100X, Eyepiece 10X

1-2-1-2 Read the number on the graduated scale of Fine Adjustment Knob.

1-2-1-3 Rotate Fine Adjust. Knob counter-clockwise to bring the object out of focus.

1-2-1-4 Re-focus by rotating Fine Adjust. Knob clockwise.

1-2-1-5 Repeat scale reading.

1-2-1-6 If the difference between readings is less than 0.002mm, the accuracy of fine adjustment is all right.

1-2-1-7 If the difference is more than 0.002mm:
- a) Disassemble B-CH by Step 1-1-1-1 and 1-1-1-2.
- b) Re-adjust according to Steps 1-1-20-1 through 1-1-20-9.

1-2-2 With Jig B-KU-035, including Electric Micrometer B-KN-001.

Tools: B-KN-001, B-KN-002

1-2-2-1 Turn the Fine Adjustment Knob to 0 position and zero the Electric Micrometer (see diagram).

Tip of the micrometer should be in contact with the gauge block at point "A".

1-2-2-2 Rotate Fine Adjust. Knob in either direction.

1-2-2-3 Reverse the rotation until scale on knob reads zero.

1-2-2-4 Read the Electric Micrometer.

1-2-2

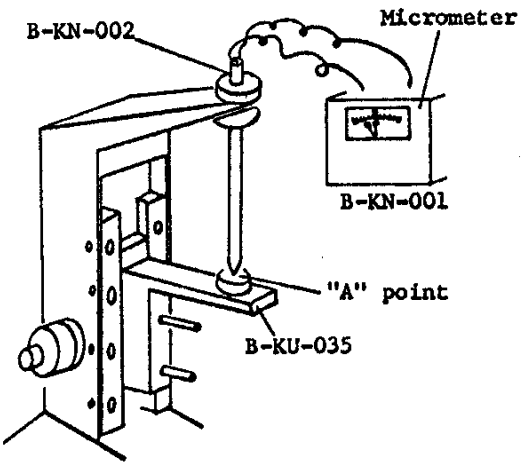

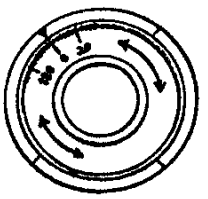

Rotate Focusing Knob in the same direction to read the meter.

1-2-2-5 If the Micrometer indicates a difference of more than 0.002mm, repeat Steps 1-1-20-1 through 1-1-20-9, until difference is less than 0.002mm.

Tool: B-KU-035

1-3 Horizontal Adjustment of Stage Surface.

1-3-1 Adjustment of Focusing Block AA7857.

1-3-1-1 Attach Focusing Block to the stand.

1-3-1-2 Mount the rectangular stage gauge KN-023 on the nosepiece and mount the rectangular standard stage B-KN-008 in place of the stage.

1-3-1-3 Move the standard stage B-KN-008 against the stage guage KN-023 with coarse adjustment knobs and make light contact with fine adjustment knobs. In this state, measure the angle of inclination of the stage with the thickness gauge OT0317

1-3-1-4 If the stage inclines more than the standard value (0.08/75), adjust Focusing Block AA7851.

1-3-1-5 For correct adjustment of Focusing Block in east-west direction, loosen clamping screws AB3x12 and center the block, keeping the stage surface in the horizontal.

1-3-1-6 For adjustment of Focusing Block in north-south direction, put Washer between Stand and Focusing Block.

1-3-2 After completing adjustment of Focusing Block, remove the standard stage B-KN-008.

1-3-3 Mount the regular stage in position, and check adjustment with the rectangular stage gauge (the standard value is 0.15/75).

Tools: B-KN-023, B-KN-008, OT0317

1-3-1-2

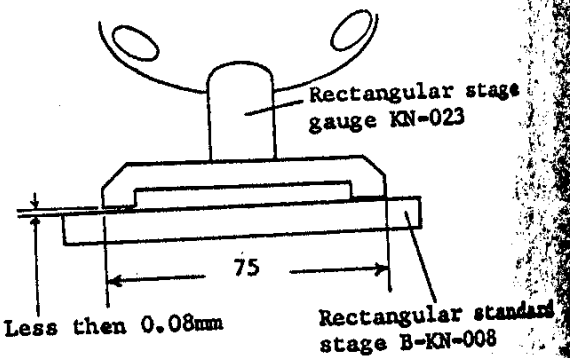

* Standard deviations:
0.08/75mm (with standard stage B-KN-008)
0.15/75mm (with regular stages)

Although the above-mentioned procedure requires two gauges, a regular stage normally provided to the BH microscope can be used in place of the rectangular standard stage B-KN-008, while the rectangular stage gauge KN-023 cannot be dispensed with for this purpose. The KN-023 is also usable for checking other microscope stages.

1-4 Adjustment of Condenser Holder.

1-4-1 Adjustment of Condenser Height Knob.

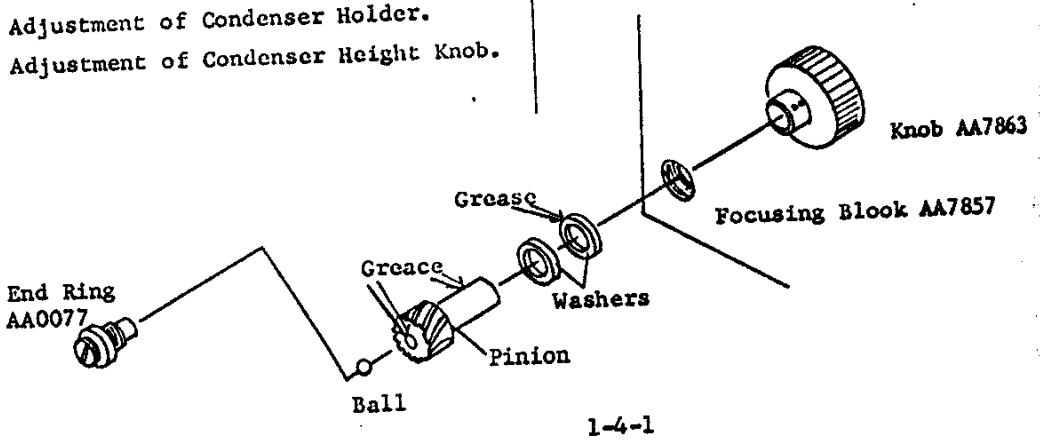

1-4-1

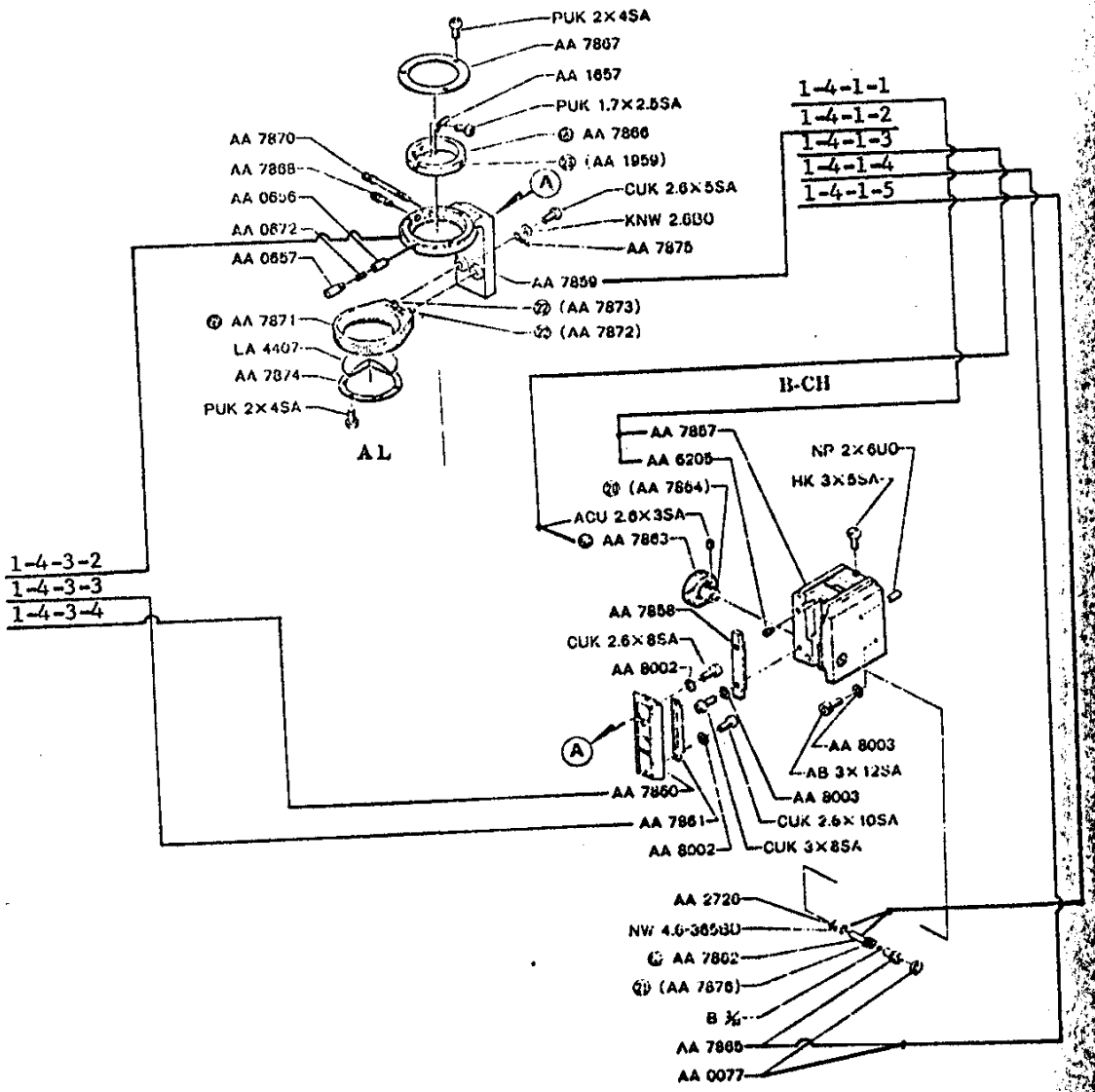
PUK 2×4SA
AA 7867
AA 1657
PUK 1.7×2.5SA
Ⓚ AA 7866
(AA 1959)
CUK 2.6×5SA
KNW 2.6D0
AA 7875
AA 7859
(AA 7873)
(AA 7872)
AA 7870
AA 7868
AA 0656
AA 0672
AA 0657
Ⓖ AA 7871
LA 4407
AA 7874
PUK 2×4SA
AL
1-4-1-1
1-4-1-2
1-4-1-3
1-4-1-4
1-4-1-5
B-CH
AA 7867
AA 6205
(AA 7864)
ACU 2.6×3SA
Ⓜ AA 7863
NP 2×6U0
HK 3×5SA
AA 7858
CUK 2.6×8SA
AA 8002
AA 8003
AB 3×12SA
AA 8003
CUK 2.6×10SA
CUK 3×8SA
AA 7860
AA 7861
AA 8002
1-4-3-2
1-4-3-3
1-4-3-4
AA 2720
NW 4.6-3858U
Ⓒ AA 7862
(AA 7876)
B ⅛
AA 7865
AA 0077

1-4-1-1 Lower the condenser all the way and unscrew Stop Pin AA6205.

1-4-1-2 Bring the condenser holder upward until Rack and Pinion are disengaged, then remove the condenser holder from the focusing block AA7857.

1-4-1-3 Loosen ACU 2.6x3 screw and remove the knob AA7863.

1-4-1-4 Disassemble End Ring AA0077 and Metal AA7865 from Pinion.

1-4-1-5 Pull out the pinion and washers.

1-4-1-6 Replace defective parts, if any.

1-4-1-7 Grease Shaft of pinion.

1-4-1-8 Grease washers and put them on pinion.

1-4-1-9 Grease pinion center and put balls in it.

1-4-1-10 Insert the pinion into Focusing Block AA7857.

1-4-1-11 Connect Metal AA7865 and End Ring to Pinion lightly.

1-4-1-12 Attach Condenser Height Knob.

1-4-1-13 Complete this assembly, adjusting the tension of Condenser Height Knob by means of End Ring AA0077, AA7865.

1-4-2 Adjustment of Rack AA7861.

1-4-2-1 Hold Condenser Holder and rotate Condenser Height Knob slightly to check play of Rack.

1-4-2-2 If Rack has play, disassemble Condenser Holder and Rack.

1-4-2-3 Put tin foils between Condenser Dovetail AA7860 and Rack.

1-4-2-4 Repeat Steps 1-4-2-1 through 1-4-2-3, until adjustment is complete.

1-4-3 Replacement of Condenser Holder Dovetail AA7860.

1-4-3-1 Check whether it is necessary to replace Condenser Holder Dovetail because of damage or deformation.

1-4-3-2 Remove Condenser Holder AA7859 from the Focusing block, if necessary.

1-4-3-3 Remove Rack AA7861.

1-4-3-4 Remove Dovetail AA7860.

1-4-3-5 Attach Replacement Dovetail on Condenser Holder tentatively without Rack.

Grease: E-3

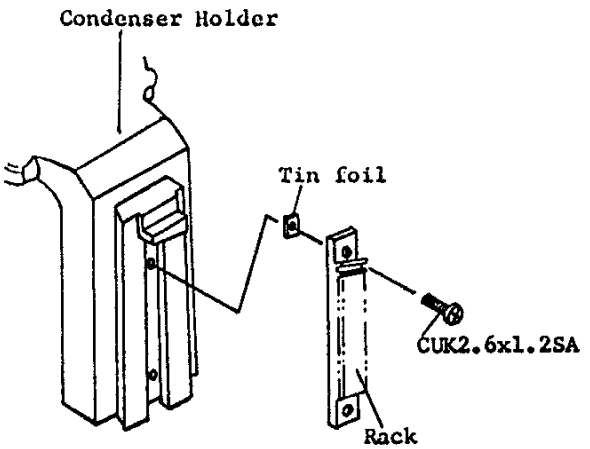

1-4-2

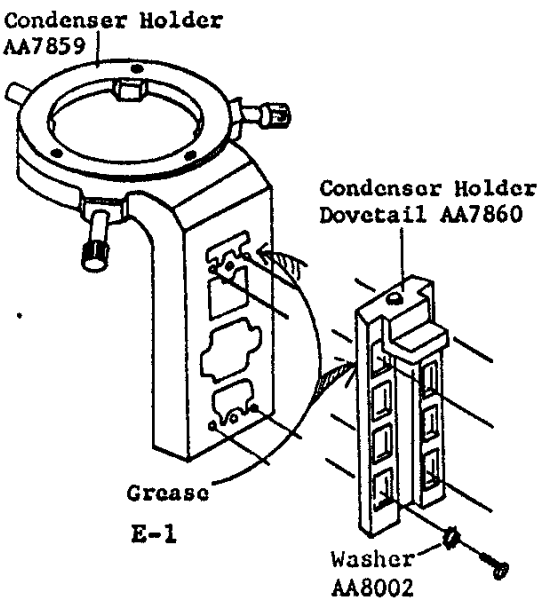

1-4-3

1-4-3-6 Mount Condenser Holder on mounting jig B-KC-056.

Tool: B-KC-056

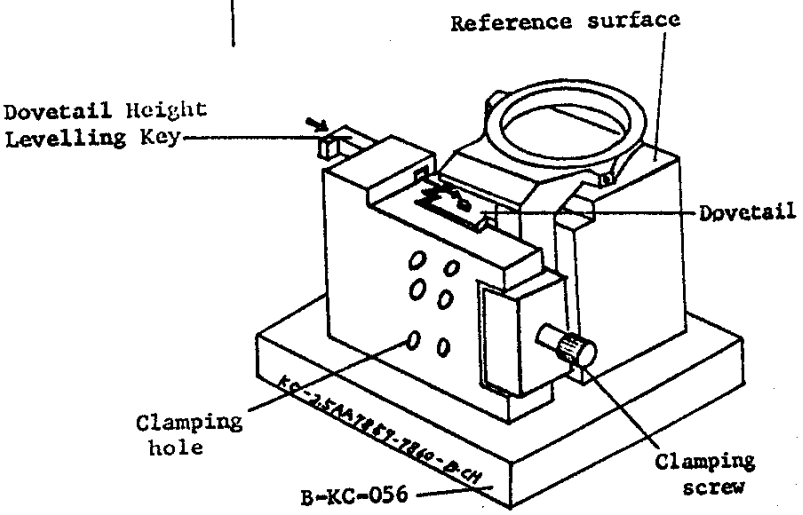

1-4-3-6

1-4-3-7 Lower Condenser Holder until it contacts the reference surface of the jig.

1-4-3-8 Insert Dovetail Height Levelling Key of the jig B-KC-056 in direction of arrow and lift Dovetail until its top contacts the key.

1-4-3-9 Clamp Dovetail with clamping screw of the jig B-KC-056.

1-4-3-10 Tighten Dovetail to Condenser Holder clamping screws through the clamping holes of the jig B-KC-056.

In case Plastic dovetail is used, leave the assembly of Condenser Holder for 12 hours after it was first clamped, then re-clamp.

1-4-3-11 Remove Condenser Holder from jig.

1-4-3-12 Attach Rack and grease the sliding surface of Dovetail AA7860.

Grease: E-1

1-4-4 Adjust play and tension of Condenser Holder.

1-4-4-1 Grasp spring bushing AA0657 on Condenser clamping ring and check for play, by swinging it.

1-4-4-2 If you feel play, loosen Dovetail AA7858, Clamping Screws CUK3x8, and pressing Dovetail Guide in direction of arrow, re-clamp.

1-4-4-3 Repeat Steps 1-4-4-1 and 1-4-4-2 until this adjustment is complete.

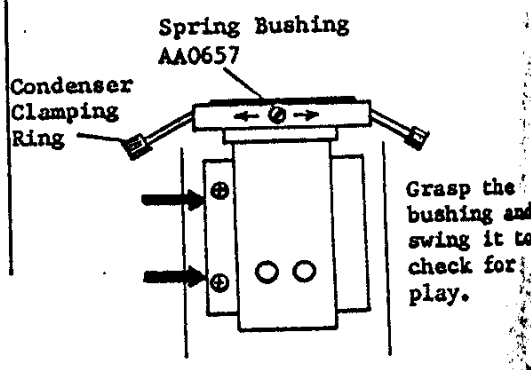

1-4-4-1

1-4-5	Others	
1-4-5-1	After disassembly as shown in diagram 1-4-5-1, clean, grease and assemble those parts.	Grease: E-2 E-1 E-3
1-4-5-2	Take care that Spring Bushing is threaded counter-clockwise (Left hand thread).	
1-4-5-3	Check play of Auxiliary Lens.	
	(a) Slightly pry open the slit on pin of Lens Mount AA7873 with a screwdriver.	
	(b) If Auxiliary Lens still has play in spite of Step (a), adjust Spring AA7875 in Condenser Holder.	Step (a) is recommended in lieu of Step (b), because Step (b) requires dismantling and readjustment of dovetails.

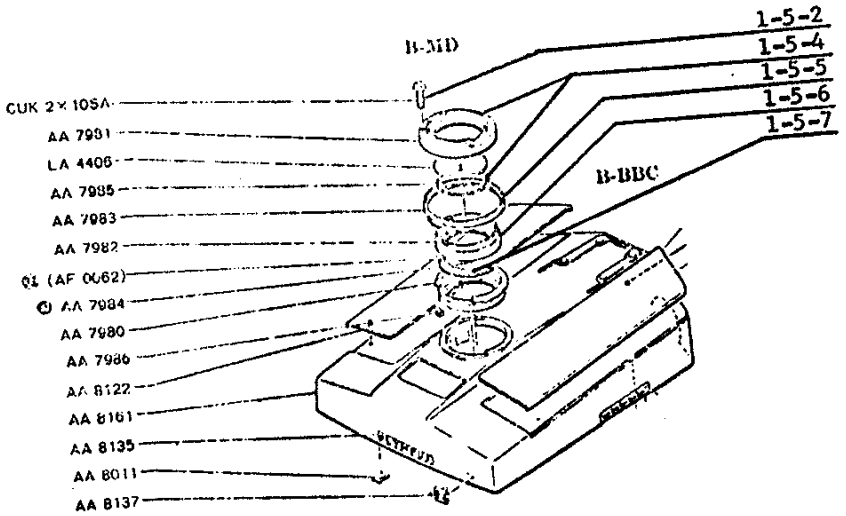
B-MD
B-BBC
1-5-2
1-5-4
1-5-5
1-5-6
1-5-7
CUK 2×10SA
AA 7981
LA 4406
AA 7985
AA 7983
AA 7982
Q1 (AF 0062)
AA 7984
AA 7980
AA 7986
AA 8122
AA 8161
AA 8135
AA 8011
AA 8137

1-5 Replacement of Light Exit Lens and Field Iris Diaphragm.

1-5-1 Remove Stage, Condenser Holder and Auxiliary Lens from Focusing Block AA7857.

1-5-2 Remove three screws CUK2x10 from Lens Frame AA7981.

1-5-3 Pull out Lens Assembly.

1-5-4 Disassemble Lens Frame and Ring AA7985 from Lens.

1-5-5 Remove Rotatable Ring AA7983.

1-5-6 Remove Inner Frame AA7982.

1-5-7 Remove Blades AA7984.

1-5-8 Check and clean each part and replace defective parts.

1-4-5-1

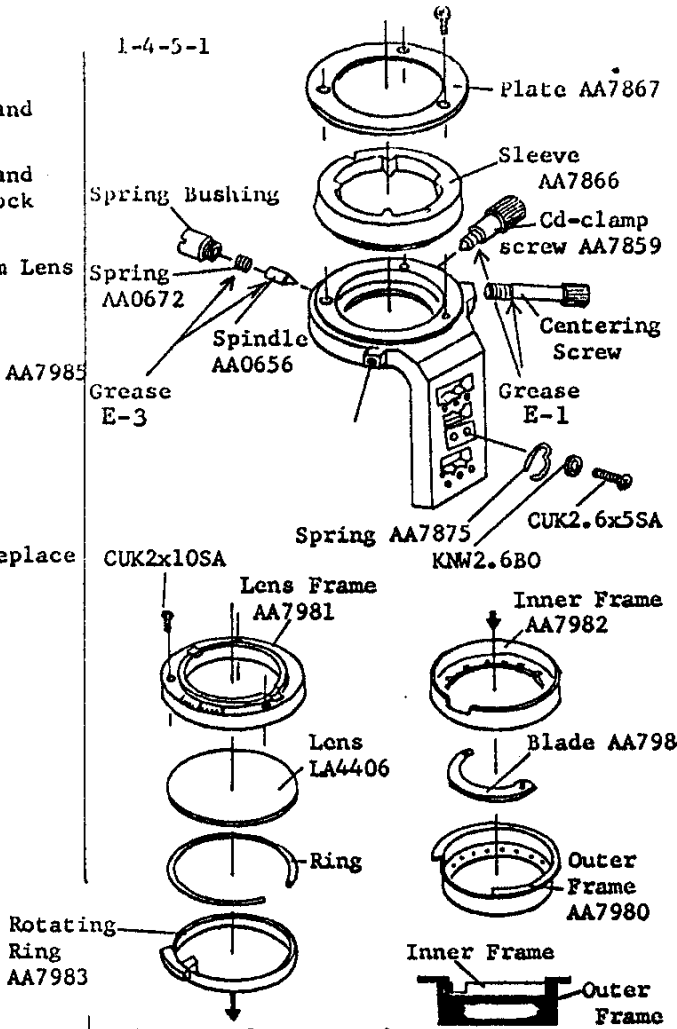

1-5 Positions of Inner and Outer Frames at full aperture of diaphragm.

1-5-9 Attach Blades to Outer Frame AA7980.

Do not touch Blade surfaces with bare hands.

1-5-10 Attach Inner Frame.

It is advisable to remember the relative position of Inner and Outer Frames at full aperture of Diaphragm, when they are disassembled.

1-5-11 Attach Rotatable Ring.

1-5-12 Aligning Lens Frame to the graduated index of Rotatable Ring, connect them.

1-5-13 Aligning the graduated index to the notch on the base, attach Light Exit Lens to base and clamp.

1-5-14 Check the function of Field Iris Diaphragm.

1-6 Hand Rest Replacement

1-6-1 Mount the stand BHA-F or BHC-F on support frame B-KU-034 and unscrew the base plate BDA or BDC.

1-6-2 Open "Speed Nuts" AA8011 in direction of arrow with screwdriver and pull them out from the base.

1-6-3 Remove the stand from support frame and strip off hand rests.

1-6-4 Sometimes it is necessary to use an alcohol-ether mixture or peeling agent to separate hand rests from the base because they are cemented.

1-6-5 Clean each hand rest and apply a small amount of "Pliobond" adhesive to its contact surface evenly.

1-6-6 Place Hand Rests on Base and apply pressure.

1-6-7 Mount Stand on support frame again and press it downward.

Tool: B-KU-034

1-6-8

1-6-9

1-7

Tool: Alcohol-ether mixture or peeling agent (MEK).
Be careful not to stain other parts with solutions.

1-7-1

1-7-2

Tool: Pliobond

1-7-3

1-7-4

1-7-5

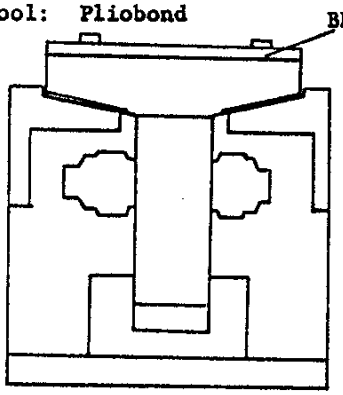

B-KU-034 1-6-1

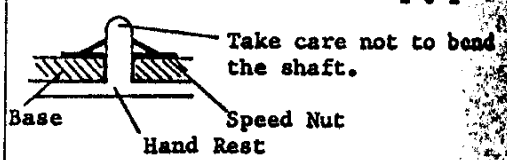

1-6-2

Tool: Pliers

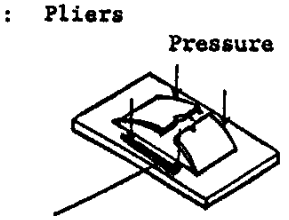

1-6-7

1-6-8 Affix Hand Rests with "Speed Nuts" as before.

Prior to attachment with "Speed Nuts", they must be flattened with tools such as pliers. Shafts must be inserted into "Speed Nuts" at right angles.

1-6-9 Finally, check that Hand Rests adhere closely to Base.

1-7 Adjustment of High/Low Magnification Selector Lever (for BHA and BHB).

1-7-1 Remove Lever AA8131 (two screws ACU2.6x6).

1-7-2 Pressing down the tool B-KK-070, loosen Nut AA8130.

Tool: B-KK-070

1-7-3 Stop loosening Nut AA8130 before it comes off completely.

1-7-4 Place the microscope stand on support frame B-KU-034.

1-7-5 Remove the loose nut this time and, turning the light path selector shaft to the "L" position, pull out the Selector Mount Assembly slowly.

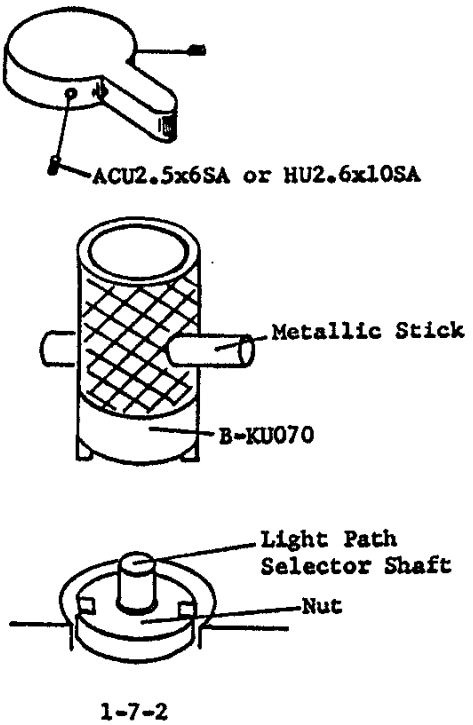

1-7-2

1-7-6 Replace Lens LA4404.
1-7-6-1 Remove Retaining Ring AA8126.

1-7-6-2 Replace or clean Lens.
1-7-6-3 Clamp Lens with Retaining Ring and shellac.

1-7-7 Replace Lens LA4405.
1-7-7-1 Remove Retaining Ring AA8127.
1-7-7-2 Remove Lens.

1-7-7-3 Replace or clean Lens and reset it in position.
1-7-7-4 Clamp Retaining Ring and apply shellac.

Use solvent to remove the ring as it was shellacked.
Tools: Tweezers, screw-drivers and solvent.

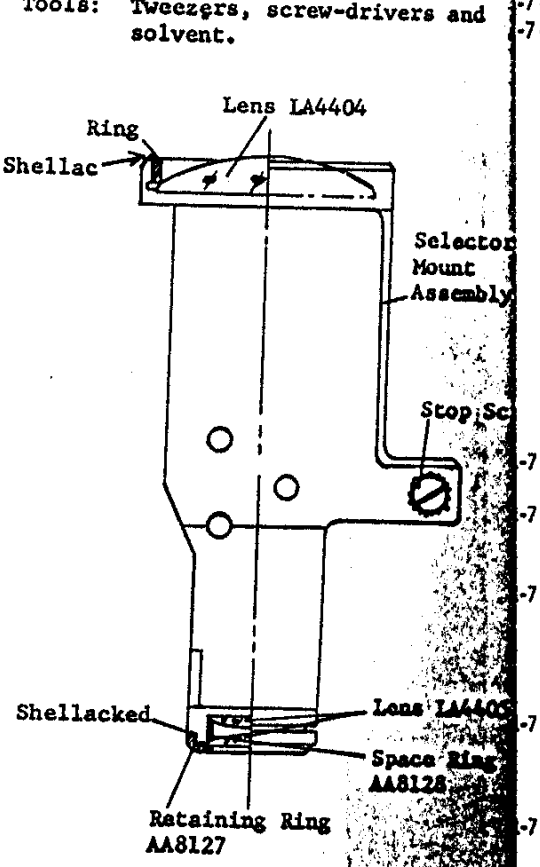

1-7-6

Apply solvent to remove the ring. If the entire unit is turned upside down, Lens can be easily removed.

Avoid clamping the ring too tight; otherwise the lens may receive strain.

1-7-8 Attach Selector Mount Assembly AA8125.

1-7-8-1 After greasing Selector Mount Assembly, insert it into the microscope base.

1-7-8-2 Clamp Nut AA8130.

1-7-8-3 Attach Lever AA8131 in such a manner, that when Lever is set to H position, the selector lens is engaged in light path.

Tool: B-KK-070

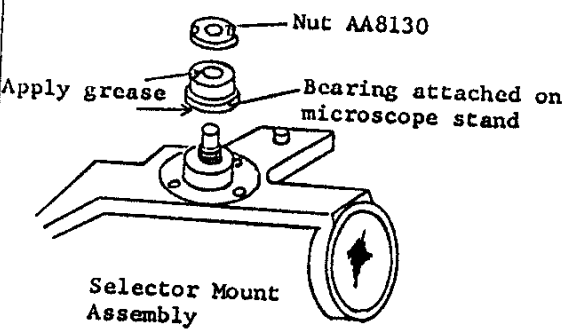

1-7-8

1-7-9 Alignment of High/Low Magnification Selector

1-7-9-1 After completing the assembly of Magnification Selector, set up Jigs B-KC-042 and B-KC-043.

1-7-9-2 Swing Selector Lens out of light path (L position) and adjust the position of Pinhole in Jig B-KC-043 so that the pinhole image is projected on the cross line scale of Jig B-KC-042.

1-7-9-3 Swing Selector Lens into light path (H position) and check the amount of the pinhole deviation by means of the scale on B-KC-042.

1-7-9-4 If the pinhole moves over 2mm, loosen screws CUK 3x5 on stop washer AA8132 and reduce the pinhole movement.

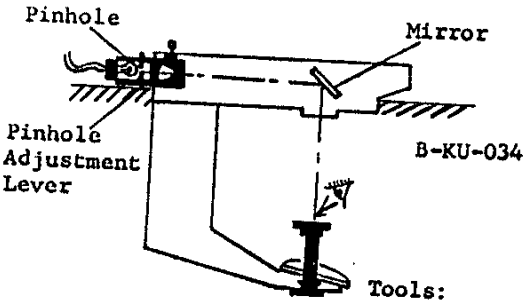

Tools: B-KC-042, B-KC-043, B-KC-034.

B-KC-042
As viewed from above

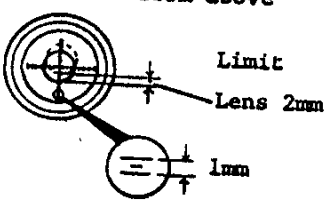

1-7-9

1-7-9-5 If the selector lever movement too heavy or too light, adjust by bending Leaf Spring of Washer AA8132 up or down as indicated by arrows in diagram.

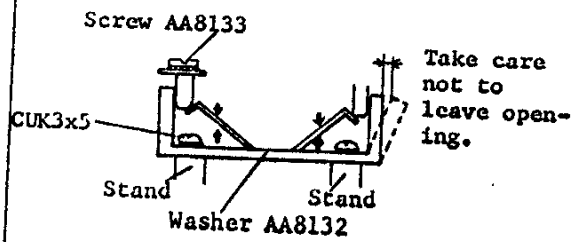

1-7-9-5

1-7-9-6 If you feel play in action of the selector lever, adjust the clearance between Screw AA8133 and Washer AA8132.

1-8 Replacement of Collector Lens B-CLC (for BHC)

1-8-1 Remove the electric equipment B-BDC and lamp socket.

1-8-2 Remove Collector B-CLC (Screw CUK4x6).

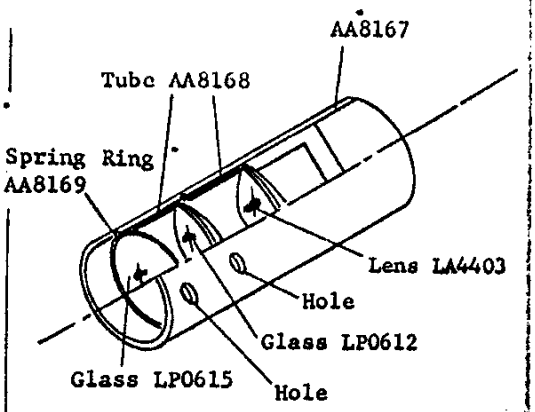

1-8

1-8-3 Remove Spring Ring AA8169.

Insert tweezers or screwdriver through holes to remove Spring AA8169.

1-8-4 After Spring is removed, Glass LP0615, Tube AA8168 and Glass LP0612 can be removed, too.

1-8-5 Remove Inner Spring Ring AA8169. And Tube AA8168 and Lens LA4403 can also be removed.

1-8-6 Replace defective parts and clean each component.

1-8-7 Assemble Lens, Tube, Springs and Glass in this order.

Make sure that each Spring is held securely in V groove.

1-9 Replacement of Lamp House B-LH (for BHA and BHB)

1-9-1 Replace Cord and Contact Terminals.
1-9-1-1 Remove Cord Holder AA8214.
1-9-1-2 Remove Cord DC0177.
1-9-1-3 Replace Cord.
1-9-1-4 Insert replaced Cord.
1-9-1-5 Attach Cord Holder AA8214.

1-9-2 Replace Frosted Glass LP0612.
1-9-2-1 Remove Spring Ring AA8169.
1-9-2-2 Replace Frosted Glass LP0613.
1-9-2-3 Attach Spring Ring.

Be careful not to scratch glass surfaces.

1-9-3 Replace Adiabatic Ring.
1-9-3-1 Remove Lamp Tube AA8210 (three CUK2.6x12SA Screws).
1-9-3-2 Remove Adiabatic Mount AA8209.
1-9-3-3 Replace Adiabatic Mount.

1-9-4
1-9-4-1
1-9-4-2
1-9-4-3
1-9-4-4
1-9-4-5
1-9-4-6
1-9-5
1-9-6
1-10
1-10-1
1-10-2
1-10-3

-9-4 Replace Lens LA4403 and Heat Absorbing Glass LP0612.

9-4-1 After removing Lamp Tube AA8210 as described in 1-9-3-1, loosen Clamping Ring AA8211 with pin-face spanner or flat-tipped divider.

9-4-2 Clean or replace Lens LA4403.

9-4-3 Attach Lens and Ring.

03 1-9-4-4 Remove Spring Ring AA8169.

-9-4-5 Clean or replace Heat Absorbing Glass.

. 9-4-6 Attach Glass and Spring Ring.

1-9-5 Attach Lens to Lamp Tube.

9-6 Attach Adiabatic Mount.

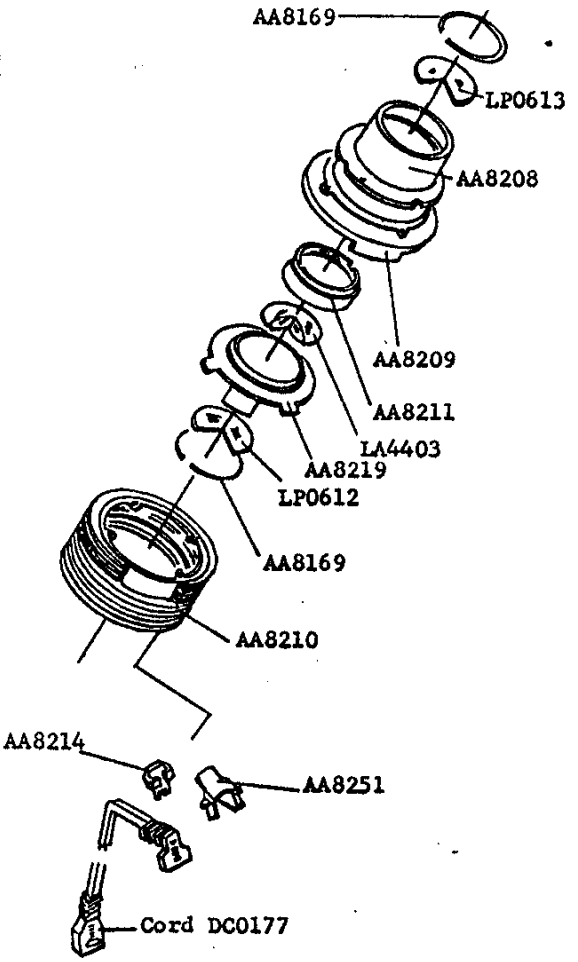

1-9

-10 Mirror Replacement

.0-1 Place the microscope stand upside down on the support frame B-KU-034.

-10-2 Unscrew the electric equipment B-BDA or B-BDC (from screws AB6x20).

-10-3 Remove Mirror Mount AA8124 from Microscope Base (three AB3x12SA).

Take extreme care in handling Mirror, because it is impossible to clean the mirror surface when mounted. If stained with dust, it is only possible to sweep it with a soft hair brush.

Do not loosen screws AHU 3x8.
Tool: B-KU-034

1-10-4 Remove Mirror LP0614 from Mirror Mount.

As Mirror is cemented to Mount, use a razor blade to remove it.

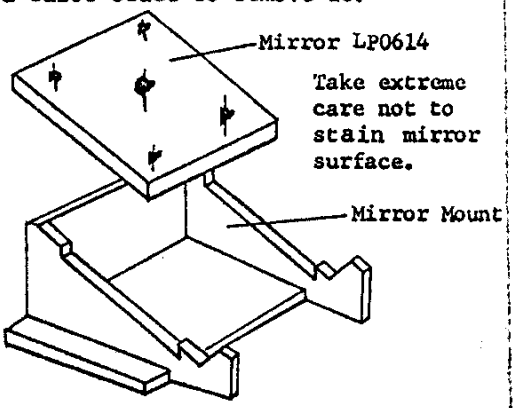

1-10-4

1-10-5 Apply adhesive, e.g. Cemedine "High-Super" to Mirror Mount.

Tool: Cemedine "High-Super"

1-10-6 Put replacement Mirror on Mirror Mount. Leave Mirror for about 15 minutes until it sticks to Mount completely.

Take care to press Mirror in close contact with Mount.

1-10-7 Install Mirror Mount in Microscope Base temporarily.

1-10-8 Set up Jigs B-KC-042 and B-KC-043.

Tools: B-KC-042, B-KC-043, B-KU-034

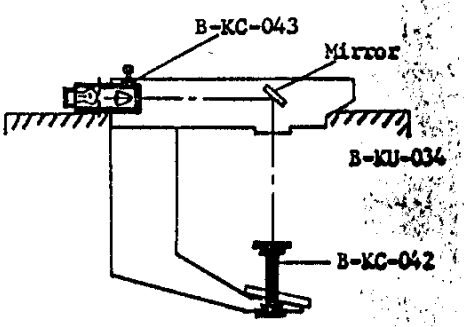

1-10-8

1-10-9 Swing High/Low Magnification Selector Lens out of light path (L positon).

1-10-10 Project pinhole image of B-KC-043 on the crossline scale of B-KC-042.

1-10-11 Create a gap of about 2.5mm between Mirror Mount and Microscope Base, by means of screws AHU 3x8.

Tools: 2.5mm pin gauge or 2.5mm dia. drill.
Recommend use of a 2.5mm pin gauge or 2.5mm diameter drill to check gap.

1-10-12 Adjust mirror position by loosening screws AB 3x12 or changing the mirror angle with three screws AHU 3x8 until pinhole image is centered on the scale on B-KC-042.

After loosening screws AB 3x12 slightly, adjust screws AHU 3x8.

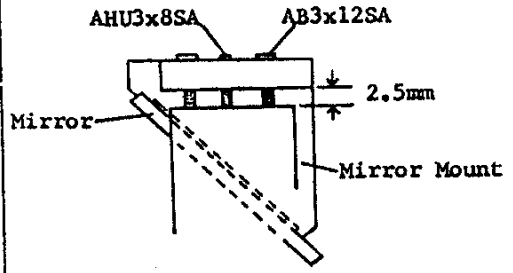

1-10-13 After double checking the distance 2.5mm between Mirror Mount and Base, shellac each screw.

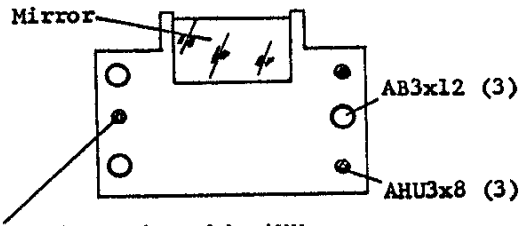

Avoid loosening this AHU as much as possible because it should be left in standard position.

Image of Pinhole

1-10-12

1-11 Disassembly of Electric Equipment B-BDA or B-BDC

1-11-1 Disconnect components that you require to disassemble, by means of a heated soldering iron.

1-11-2 If components to be disassembled are held in position with "Speed Nuts" AA8011, open Speed Nuts in direction of arrow (see diagram) to pull out.

Be careful not to bend Shaft.

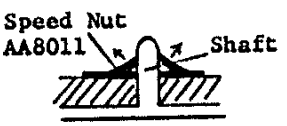

1-11-2

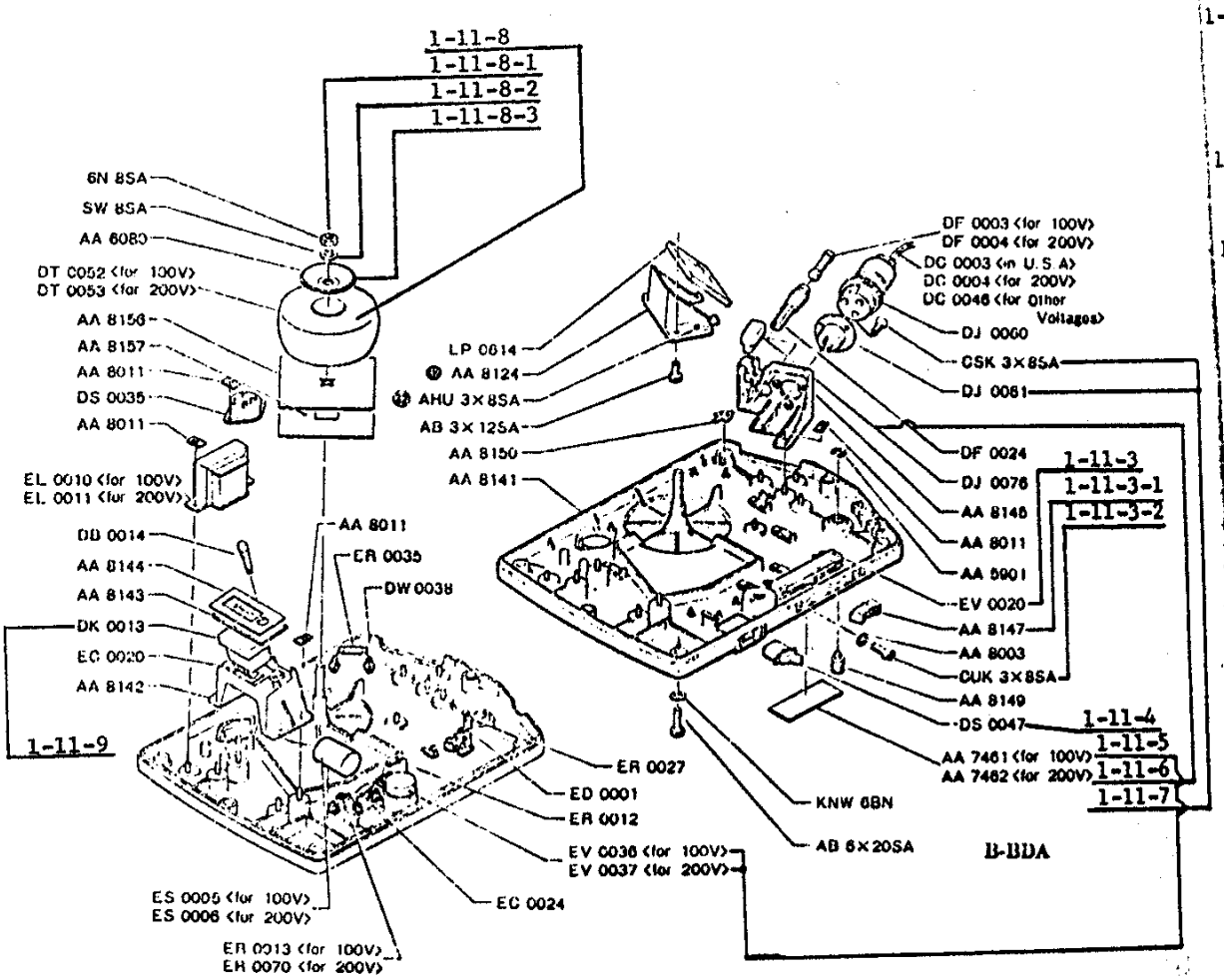
1-11-8
1-11-8-1
1-11-8-2
1-11-8-3
6N 8SA
SW 8SA
AA 6080
DT 0052 (for 100V)
DT 0053 (for 200V)
AA 8156
AA 8157
AA 8011
DS 0035
AA 8011
EL 0010 (for 100V)
EL 0011 (for 200V)
DB 0014
AA 8144
AA 8143
DK 0013
EC 0020
AA 8142
1-11-9
AA 8011
ER 0035
DW 0038
ES 0005 (for 100V)
ES 0006 (for 200V)
ER 0013 (for 100V)
ER 0070 (for 200V)
EC 0024
ER 0027
ED 0001
ER 0012
EV 0036 (for 100V)
EV 0037 (for 200V)
LP 0014
AA 8124
AHU 3×8SA
AB 3×12SA
AA 8150
AA 8141
DF 0003 (for 100V)
DF 0004 (for 200V)
DC 0003 (in U.S.A)
DC 0004 (for 200V)
DC 0046 (for Other Voltages)
DJ 0060
CSK 3×8SA
DJ 0061
DF 0024
DJ 0076
AA 8148
AA 8011
AA 5901
EV 0020
AA 8147
AA 8003
CUK 3×8SA
AA 8149
DS 0047
AA 7461 (for 100V)
AA 7462 (for 200V)
KNW 6BN
AB 6×20SA
B-BDA
1-11-3
1-11-3-1
1-11-3-2
1-11-4
1-11-5
1-11-6
1-11-7

1-11-3 Removal of Variable Thyristor EV0020.
1-11-3-1 Pull out Knob AA8147.
1-11-3-2 Remove two screws CUK3x8.

1-11-4 Removal of Switch DS0047.
1-11-4-1 Bending the thongs in direction of arrow, push in switch assembly and remove.
1-11-4-2 Once removed, thongs are difficult to bend back to original position. Prior to switch removal, therefore, you should carefully check if it is necessary to remove it or not.

1-11-5 Removal of Variable Resistor EV0036 or EV0037.
Remove nut at the back of resistor.

1-11-6 Removal of Jack DJ0076.
Pull up Jack from D-Unit AA8145.

1-11-7 Removal of Receptacle DJ0061 (three screws CSK3x8) from D-Unit.

1-11-8 Removal of Transformer DT0052 or DT0053.
1-11-8-1 Remove nut 6N8.
1-11-8-2 Remove Washer SW8.
1-11-8-3 Remove Clamp Plate AA6080.

1-11-9 Removal of Meter DK0013.
1-11-9-1 Pull out Meter DK0013 from Meter Mount AA8142.

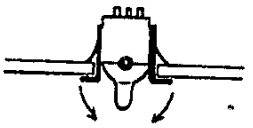

1-14-4-1

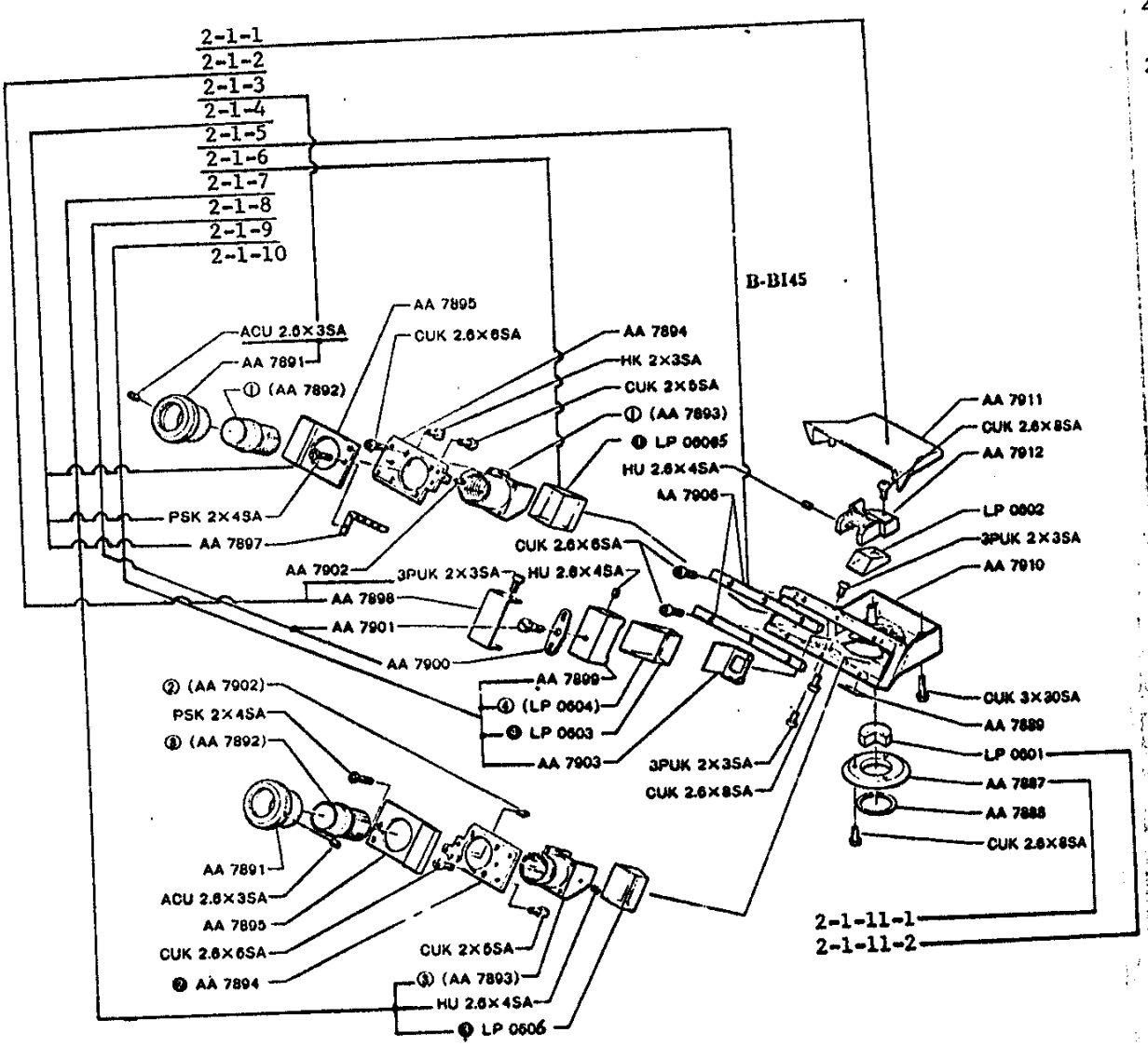
2-1-1
2-1-2
2-1-3
2-1-4
2-1-5
2-1-6
2-1-7
2-1-8
2-1-9
2-1-10
B-BI45
ACU 2.6×3SA
AA 7891
① (AA 7892)
AA 7895
CUK 2.6×6SA
AA 7894
HK 2×3SA
CUK 2×6SA
① (AA 7893)
❶ LP 0606
HU 2.6×4SA
4A 7906
AA 7911
CUK 2.6×8SA
AA 7912
LP 0602
3PUK 2×3SA
AA 7910
PSK 2×4SA
AA 7897
AA 7902
3PUK 2×3SA
HU 2.6×4SA
CUK 2.6×6SA
AA 7898
AA 7901
AA 7900
AA 7899
④ (LP 0604)
❸ LP 0603
AA 7903
② (AA 7902)
PSK 2×4SA
③ (AA 7892)
AA 7891
ACU 2.6×3SA
AA 7895
CUK 2.6×6SA
❷ AA 7894
CUK 2×6SA
③ (AA 7893)
HU 2.6×4SA
❹ LP 0606
3PUK 2×3SA
CUK 2.6×8SA
CUK 3×30SA
AA 7889
LP 0601
AA 7887
AA 7888
CUK 2.6×8SA
2-1-11-1
2-1-11-2

Observation Tubes B-BI and B-TR

-1 Disassembly of Observation Tubes

-1-1 Remove Upper Plate AA7911 (four screws CUK2x30) for BH-BI45.

-1-2 Remove Cover AA7898 (three screws 3PUK3x3).

-1-3 Remove Diopter Ring AA7891 (three screws ACU2.6x3, on both sides).

-1-4 Remove Finger Rest AA7895 (two PSK2x4 and two CUK2x5 for left hand side; one PSK2x4 and two CUK2x5 for right hand side).
Graduated Plate is also removed.

-1-5 Remove the upper part of Dovetail AA7906.

Do not remove Lower Part because it should remain in its standard position.

-1-6 Remove Prism P5 on the left hand side.

Do not disassemble Prism LP0605, Prism Mount AA7893, Helicoid AA7892 and Dovetail AA7894 when they are removed. Especially take care not to disassemble or move the prism.

-1-7 Remove Prism P6 on the right hand side.

Do not disassemble P6, same as with P5.

-1-8 Remove Screw AA7901 and Lever AA7900.

-1-9 Remove Prism Assembly P3 and P4 (three screws CUK2.6x8).

Do not disassemble them.

-1-10 Remove P2.

Do not disassemble P2.

-1-11 Your disassembly should be limited as far as Step 2-1-10 as much as possible. If replacement of Circular Dovetail and Cylindric Prism P1 is necessary, take the following steps:

-1-11-1 Remove Circular Dovetail AA7887 (three screws CUK2.6x8).

Be careful that one of three screws is cemented with adhesive.

-1-11-2 Remove Circular Dovetail from P1 as follows:

-1-11-3 Heat Ring Dovetail with frame to facilitate removal of P1.

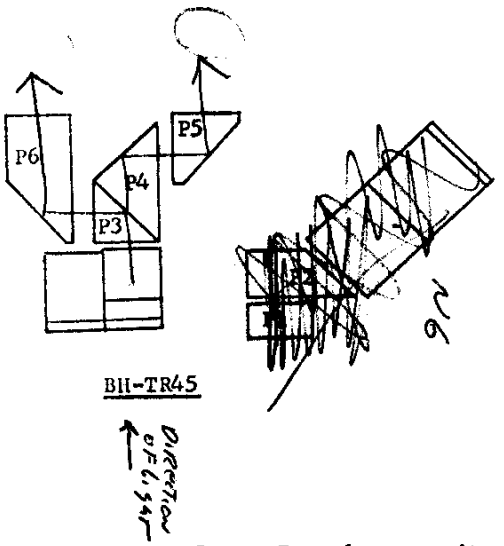

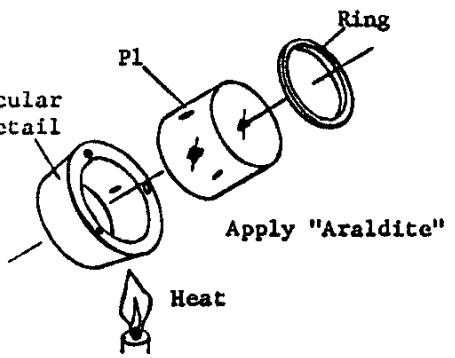

2-1-11-2

P1: LP0601

P2: LP0602 FOR BH-BI45
LP0607 FOR BH-TR45
LP0609 FOR BH-TR30
LP0611 FOR BH-BI30

P3: LP0603

P4: LP0604

P5: LP0605

P6: LP0606

2-2 Assembly and Adjustment of Binocular Tube

2-2-1 Assembly of Circular Dovetail

2-2-1-1 Use the centering jig B-KC-041 to center Circular Dovetail in Binocular Tube, and clamp it with three screws CUK2.6x8.

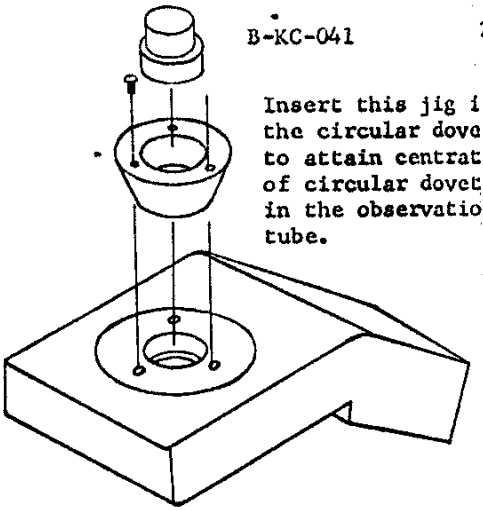

Observation tube

2-2-1-1

2-2-1-2 Apply adhesive (Araldite) to one of three Screws.

Tool: "Araldite"

2-2-1-3 Remove the centering jig B-KC-041.

2-2-2 Assembly of Prism P1 and Ring.

Tool: "Araldite"

2-2-2-1 Put a small amount of "Araldite" at three spots between Prism P1 and Circular Dovetail and insert Prism into Dovetail.

2-2-2-2 Attach Ring AA7888 to P1 with "Araldite".

2-2-2-3 Take care not to stain Prism surface with excessive adhesive.

2-2-3 After the assembly of these parts above, leave the assembly for about 12 hours until adhesive dries up.

Take care to keep P1, Ring and Dovetail in close contact.

2-2-4 Assemble Prism P2 and adjust it.

2-2-4-1 Attach Prism P2 to the binocular tube.

2-2-4-2 Attach the centering objective KN-021 to the microscope stand.

Make P2 centration adjustment within the clearance of these tapped holes.

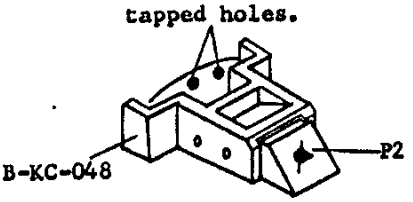

2-2-4

2-4-3 Mount Binocular Tube B-BI on the Stand.

2-4-4 Insert the jig B-KC-048 into the Eyepiece Tube of B-BI.

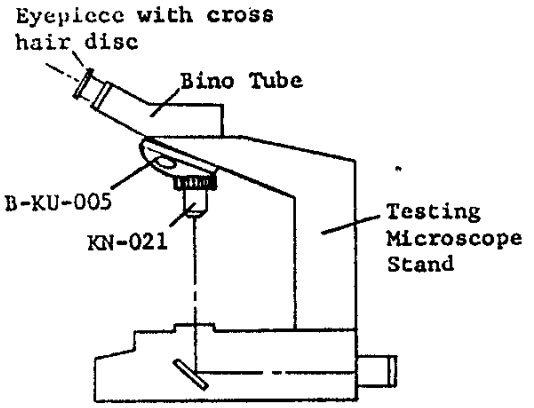

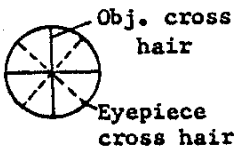

2-2-4-3

2-4-5 Insert the eyepiece with cross hair disc into B-KC-048.

Tool: Eyepiece 10X with cross hairs.

2-4-6 Adjust Prism Mount until centering objective and eyepiece are centered correctly.

2-4-7 After the centration, clamp them with three screws CUK2.6x8.

2-4-8 Remove B-KC-048.

2-4-9 Attach P3 and P4 to Jig B-KC-052.

Tool: B-KC-052

2-4-10 Attach P3 and P4 with B-KC-052 to B-BI.

2-4-11 Insert Eyepiece 10X with cross hair disc into B-KC-052, and looking through this eyepiece, asertain that the centering objective is centered, and clamp P3 and P4 in position with three screws CUK2.6x8.

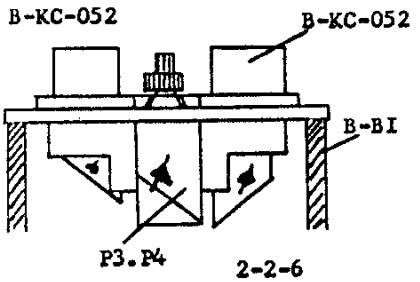

2-2-6

2-4-12 Remove B-KC-052.

2-4-13 Attach Lever AA7900 to P3 and P4 Mount.

Lever and shaft should be greased with E-1

2-4-14 Apply grease E-1 to both Dovetails.

2-4-15 Attach P5 and P6 to B-BI.

2-4-16 Attach Fixed Dovetail AA7894 without any gap between them.

2-4-17 Center the ring and left fields of view.

CT

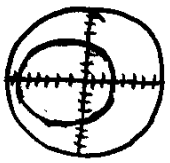

2:1

Set Telescope At 750 MM
For Focus on

2-2-14-1 Check deviations of centers in the left and right fields of view by means of Centering Objective and Eyepiece with cross hair disc.

Standard position
(in the left field of view)

Allowances of centering deviation between right and left centers:

North-South direction 0.2mm
East-West direction ..... 0.2mm (out
0.4mm (inw

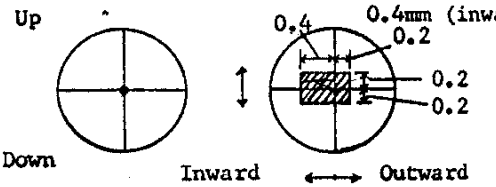

Oblique lined area indicated allowance of deviation.

Allowance of centering deviation is formulated as follows:

2-2-14

= Distance on specimen surface X objective magnification

Ex. $0.2 = X \times 10$

$$X = \frac{0.2}{10} = 0.02$$

0.02 equals two increments on the 1/100 scale.

2-2-14-2 Adjust P3 and P4 positions until deviations of centers in the north-south direction between the right and left fields of view are corrected.

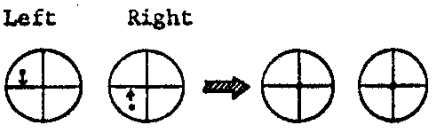

Center of centering Obj.

2-2-14-2

2-2-14-3 If both centers are deviated in one way in east-west direction, adjust P2.

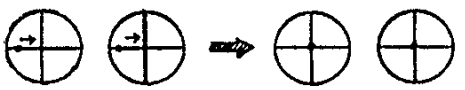

2-2-14-3

2-2-14-4 If both centers are deviated in the opposite directions with each other (in east-west direction), adjust P3 and P4 in north-south direction.

2-2-14-4

2-2-14-5 If you cannot correct north-south deviations after all, equalize distances of left and right deviations from the centers by adjustment of P3 and P4, and adjust Fixed Dovetail until centration is complete in both fields of view.

It should be avoided as much as possible to adjust the Fixed Dovetail.

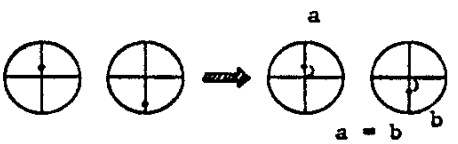

2-2-14-5

2-2-14-6 If north-south deviations are equidistant from centers in the opposite directions with each other, slightly adjust Fixed Dovetail into inclined position.

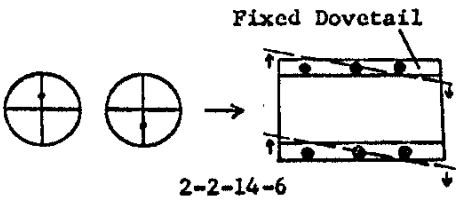

2-2-14-6

2-2-14-7 If both centers are deviated in a same way in north-south direction, move Fixed Dovetail into parallel position.

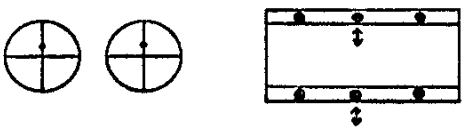

2-2-14-7

2-2-15 Replacement of P2

2-2-15-1 Remove Cover AA7911 (four screws CUK3x30).

2-2-15-2 Remove P2 (three screws CUK2.6x8).

Take care not to hit P3 and P4 with P2.

2-2-15-3 Attach a new P2.

2-2-15-4 After completing the centration in right and left fields with the new P2, clamp it.

2-2-15-5 If centration is still incomplete, take steps 2-2-4 through 2-2-14.

2-2-16 Replacements of P5 and Sliding Dovetail

2-2-16-1 Remove P5, following Steps 2-1-1 through 2-1-6.

2-2-16-2 Remove Sliding Dovetail AA7894 from P5 (four screws HK2x3).

2-2-16-3 Replace P5.

2-2-16-4 Attach Sliding Dovetail to P5.

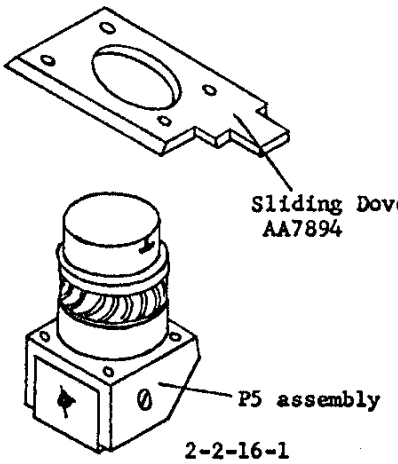

2-2-16-1

2-2-16-5 Attach P5 assembly to the binocular tube.

2-2-16-6 Attach Dovetail AA7906 (three screws CUK2.6x6).

2-2-16-7 Mount the centering objective to the revolving nosepiece.

2-2-16-8 Insert the eyepiece with cross hair disc into the eyepiece tube. Center the eyepiece and objective, adjusting four screws.

2-2-16-9 Check deviations of centers in the right and left fields of view.

2-2-17 Replacements of P6 and Sliding Dovetail.

Tool: Light source

Refer to Replacement of P5 in Steps 2-2-16-1 through 2-2-16-9.

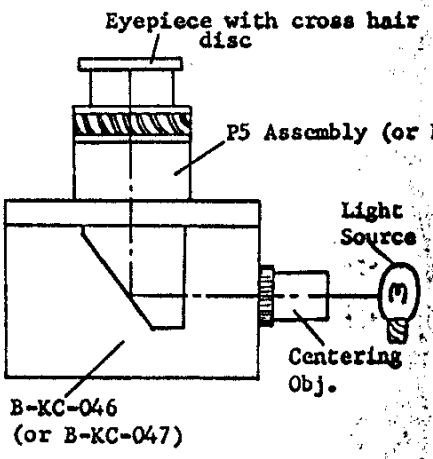

2-2-17

2-2-18 Check irregular movements, creaks, tension and backlash in interpupillary distance adjustment. If any, adjust the upper Dovetail AA7906.

2-2-19 Attach Finger Rest AA7895 on the right side Sliding Dovetail AA7894.

2-2-20 Attach Finger Rest AA7895 to Sliding Dovetail AA7894.

2-2-21 Attach Interpupillary Distance Scale AA7897 to Sliding Dovetail on the left hand side.

2-2-22 Adjust the position of Interpupillary Distance Scale.

2-2-22-1 Set the interpupillary distance at 62 on scale by means of jig B-KN-011.

2-2-22-2 Align the triangle mark (▼) at 62 setting.

Tool: B-KN-011

Less than 0.15

2-2-22-2

2-2-23 Attach Diopter Ring AA7891 to each Eyepiece Tube temporarily.

2-2-24 Mount the standard optical tube length objective KN-025 to the nosepiece.

Tool: Eyepiece P10X

2-2-25 Insert Eyepiece P10X into the right hand Eyepiece Tube.

2-2-26 Apply Centering Telescope KN-020 (-1 diop) to Eyepiece. Looking through Centering Telescope and Eyepiece, adjust Helicoid Ring until a best image of the objective is obtained. Then align Diopter Ring temporarily attached on Eyepiece Tube to the 62 setting, and clamp finally.

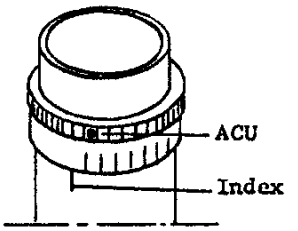

In either direction, index line should go beyond extreme ends of scale.

2-2-26

2-2-27 Adjust Diopter Ring on the left hand, following Steps 2-2-25 and 2-2-26.

2-2-28 Check the adjustment range of Diopter Rings.

2-2-29 Attach Cover AA7898.

2-2-30 Attach Upper Cover AA7911.

2-3 Adjustment of Trinocular Tube.

2-3-1 For disassembly of Trinocular Tube, follow Steps 2-1-1 through 2-1-9.

2-3-2 Remove Beam Split Prism.

2-3-2-
2-3-2-
2-3-2-
2-3-3
2-3-4
2-3-5
2-3-6
2-3-7
2-3-8
2-3-9
2-3-

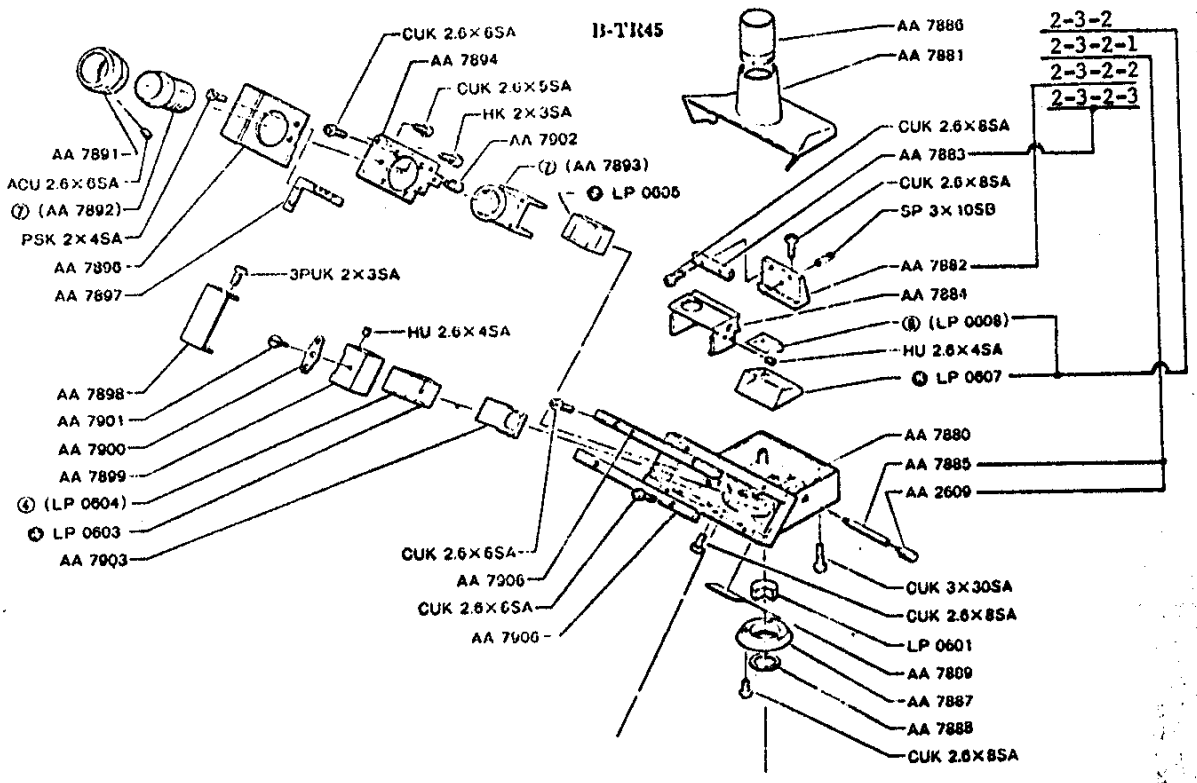

2-3-2-1	Remove Light Path Selector Lever.	
2-3-2-2	Remove Fixed Dovetail AA7882.	
2-3-2-3	Remove Dovetail Metal AA7883.	
2-3-3	Replace Beam Split Prism assembly, including AA7977, LP0609 and LP0610 for BH-TR30 or AA7884, LP0607 and LP0608 for BH-TR45.	
2-3-4	Apply grease E-1 to Dovetails.	Grease: E-1
2-3-5	Attach Beam Split Prism assembly to Fixed Dovetail.	
2-3-6	Check movement of Beam Split Prism.	Adjust it by means of Dovetail Metal AA7883.
2-3-7	Attach Beam Split Prism assembly to Trinocular Tube.	
2-3-8	Attach Light Path Selector Lever.	
2-3-9	Adjust Prism in a same manner as Prism P2 in Binocular Tube with the exception that centration of Beam Split Prism must be checked when Prism is pushed in and out.	
2-3-10	For other adjustments, follow Steps as described in Binocular Tube.	

3. Stage with Low Drive Controls B-SVR and B-SVL

3-1 Adjustment of North-South and East-West Drive Controls (for Excessive Tension, Irregularities, Creaks, Plays, etc.)

3-1-1 In case Nut 6N3SA is clamped too tight.

3-1-1-1 Loosen Nut 6N3SA with a box wrench 5.5mm (B-KK-077).

3-1-1-2 Adjust tightness of the nut properly.

3-1-1-3 Cement the nut at proper tightness.

Tools: Box wrench 5.5mm, B-KK-077,
Phillips screwdriver,
Hex wrench, B-KK-078

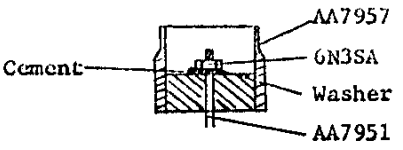

3-1-1

3-1-2 Adjustment and replacement of Knob.

3-1-2-1 Disassemble Low Drive Controls from Stage AA7935.

(a) Remove Drive Control Knob AA7953 (three PQK2x6).
(b) Remove Nut 6N3SA.
(c) Remove Drive Control Knob AA7957 with AA7964.
(d) Remove Washer AA7954.
(e) Remove Spring AA7955.
(f) Remove Nut AA7956 (three ACU2x6).
(g) Remove Spring AA7955.
(h) Remove Washer AA7954.
(i) Remove Pinion AA7952.
(j) Remove Drive Control Knob AA7953 (three PQK2x6).
(k) Remove AA7950 with tool B-KK-078 for old type or with hex. spanner for new type.
(l) Remove Pinion AA7951 and Vertical Rack AA7946.

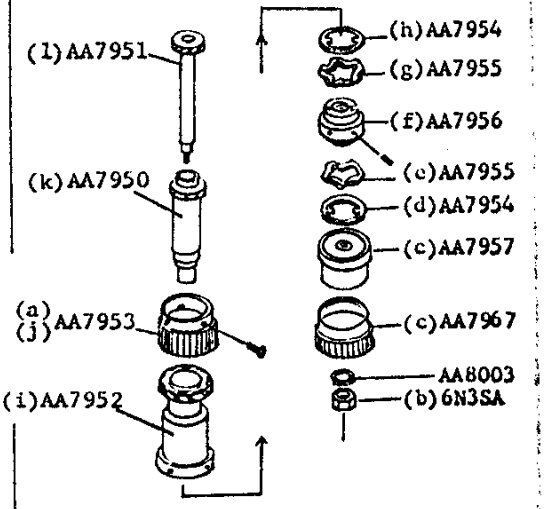

3-1-2-1

3-1-2-2 Clean and grease each part, then assemble them.

(a) Attach Knob AA7953 to Pinion AA7952.
(b) Attach Bearing AA7950.
(c) Attach Washer AA7954.
(d) Attach Spring Washer AA7955.
(e) Attach Nut AA7956.
(f) Adjust tension of Drive Control Knob by screwing Nut.
(g) After adjustment of Drive Control Knobs, clamp the nut with screws (ACU2x6).

(h) Attach Pinion AA7951.
(i) Insert the assembly into jig B-KU-030.
(j) Attach Spring AA7955.
(k) Attach Washer AA7954.
(l) Attach Knob AA7957.
(m) Screw Hex. Nut 6N3SA.

Tool: B-KU-030

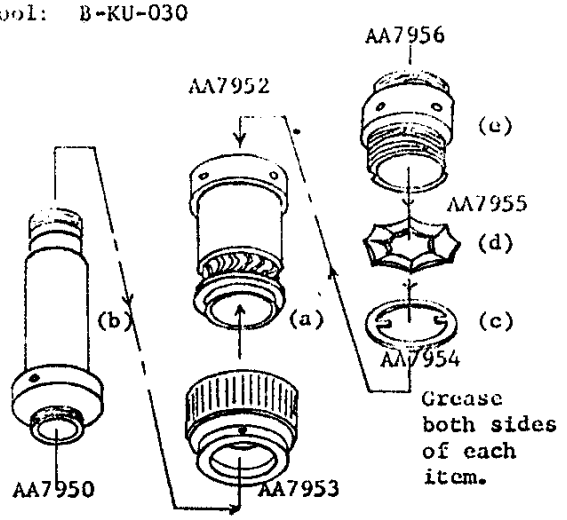

3-1-2-2 (a - e)

Grease: E-4

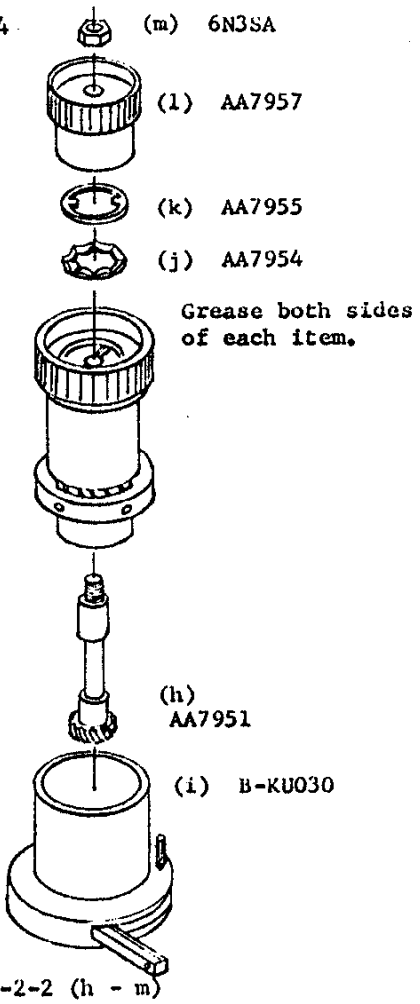

3-1-2-2 (h - m)

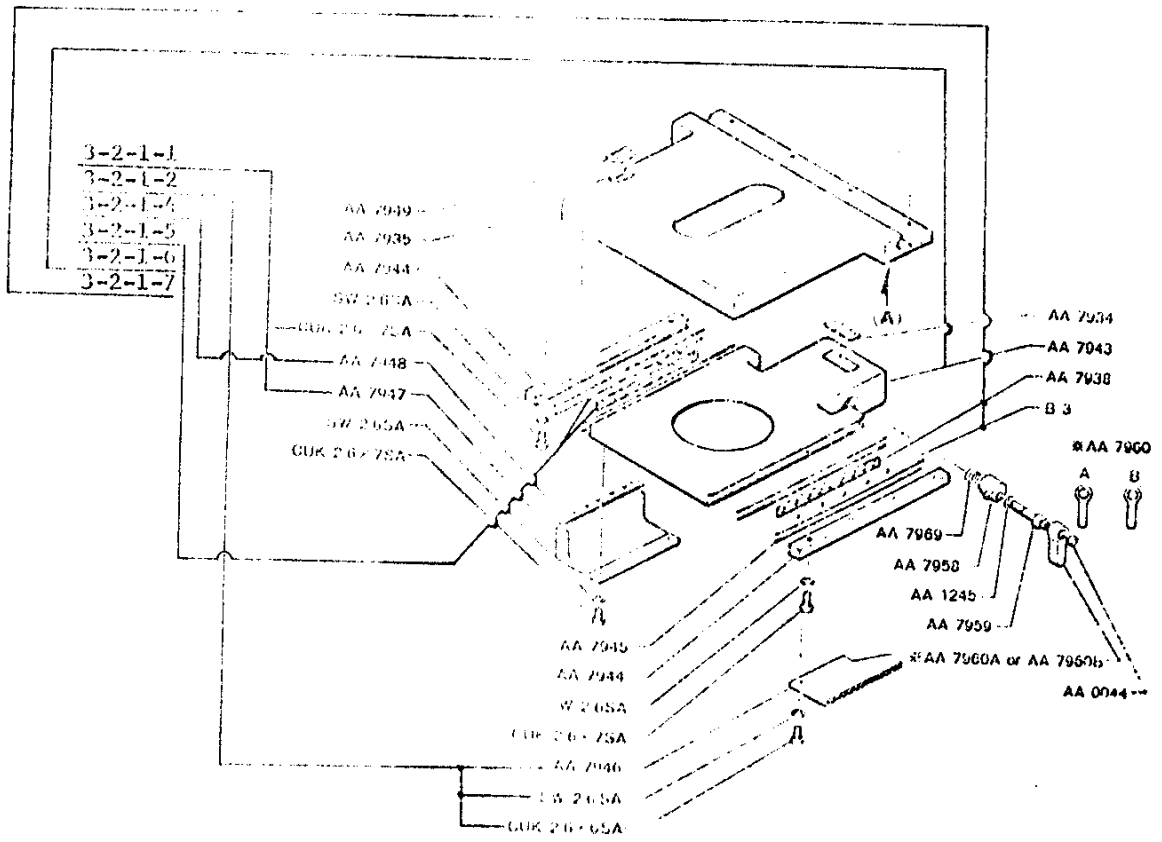

(n)

(o)

(p)

3-1-2-3

3-1-2-4

(a)

(b)

(c)

(d)

3-2

3-2-1

3-2-1-1

3-2-1-2
3-2-1-3

3-2-1-4

3-2-1-5
3-2-1-6
3-2-1-7
3-2-1-8

(n) Remove the entire assembly from jig B-KU-030, and check the tension of east-west drive control.

This tension can be changed by adjustment of Hex. Nut.

(o) If the tension of this knob is insufficient, insert it into B-KU-030 again, and tighten Hex. Nut.

(p) When tension adjustment is completed, affix Hex. Nut with adhesive.

Grease: E-1

3-1-2-3 Mount the Knob assembly to Stage by means of B-KK-078.

Tool: B-KK-078

3-1-2-4 Mount Vertical Rack AA7946.

(a) Check the function of Rack and Pinion by rotating Knob.

(b) If there is any play between Rack and Pinion, adjust it by bringing Rack closer to Pinion.

(c) When one knob is heavy and the other is light, Rack is attached in oblique position.

(d) If the motion is heavy, bring away Rack from Pinion slightly.

3-2 Adjustment of East-West and North-South Drive Controls (if they are too heavy, too light, creaking, dirty, bending, or irregular in motions).

3-2-1 Disassemble Lower Stage.

The disassembly of East-West Drive Controls takes place after removal of Lower Stage.

3-2-1-1 Remove Scale Plate AA7947 (three CUK2.6x7).

3-2-1-2 Remove Rack AA7946 (two CUK2.6x6).

3-2-1-3 Set Lower Stage on support frame B-KC-54.

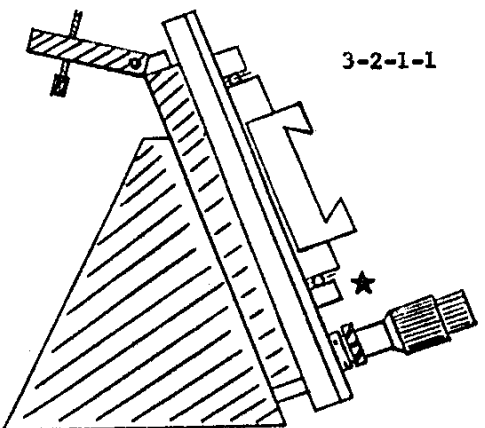

★ Never disassemble this guide because it should be kept in standard position.

3-2-1-4 Remove Guide AA7944 (four CUK2.6x7).

Remove only the opposite end of Guide from Knob.

3-2-1-5 Remove nine Balls B3 and Casing AA7938.

3-2-1-6 Remove Lower Stage AA7943.

3-2-1-7 Remove nine Balls B3 and Casing AA7938.

3-2-1-8 Re-assemble Guide AA7944 temporarily.

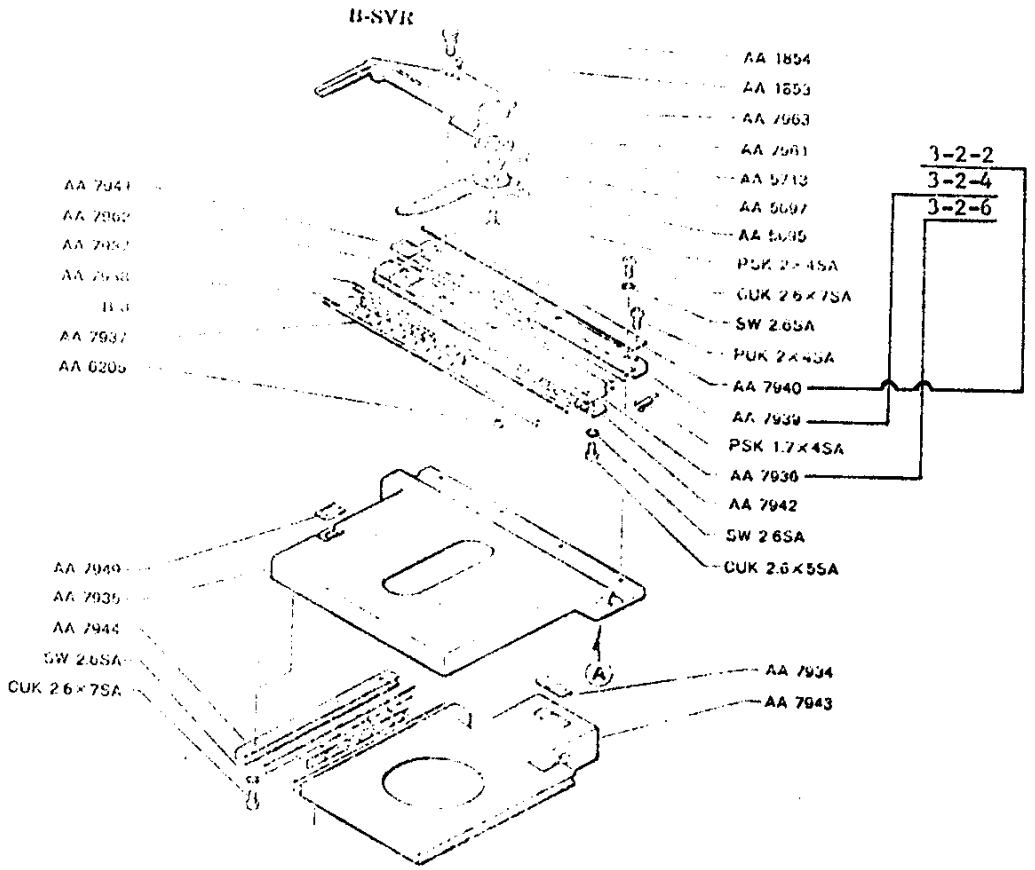
B-SVR
AA 1854
AA 1855
AA 7963
AA 7961
AA 5713
AA 5697
AA 5695
PSK 2×4SA
CUK 2.6×7SA
SW 2.6SA
PUK 2×4SA
AA 7940
AA 7939
PSK 1.7×4SA
AA 7936
AA 7942
SW 2.6SA
CUK 2.6×5SA
AA 7941
AA 7962
AA 7957
AA 7938
B-3
AA 7937
AA 6205
AA 7949
AA 7935
AA 7944
SW 2.6SA
CUK 2.6×7SA
A
AA 7934
AA 7943
3-2-2
3-2-4
3-2-6

3-2-2	Remove Scale AA7940 (three PUK2.4).	
3-2-3	Set Stage on support frame B-KC-055.	Tool: B-KC-055 The stage is set on jig in a manner that stage surface faces the repairman.
3-2-4	Remove Guide AA7939 (four CUK2.6x7).	
3-2-5	Remove nine Balls B3 and Casing AA7938.	
3-2-6	Remove Feed Plate AA7936.	
3-2-7	Remove nine Balls B3 and Casing AA7938.	
3-2-8	Clean out grease from each part.	
3-2-9	Check any scratches, bends, dents on abrasive surfaces of wires and balls; if anything defective found serious, replace them.	
3-2-10	Re-assemble each part after greasing.	Grease: E-1
3-2-11	Grease wires AA7937.	Do not apply grease too much.
3-2-12	Attach Casing AA3938.	
3-2-13	Grease nine Balls B3 and insert them into Casing hole.	
3-2-14	Grease Wire of Feed Plate AA7936, push it out about 5mm from the left end of Stage, and affix.	Rack and Pinion are set in gear.
3-2-15	Mount Casing AA7938.	
3-2-16	Grease nine Balls B3 and insert them into Casing hole.	
3-2-17	Grease Guide AA7939, and assemble.	The Guide should have play when screwed.
3-2-18	Place Guide Holder of support frame B-KC-055 on Guide AA7939, and clamp with two knurled screws.	Balls should come just below knurled screws.

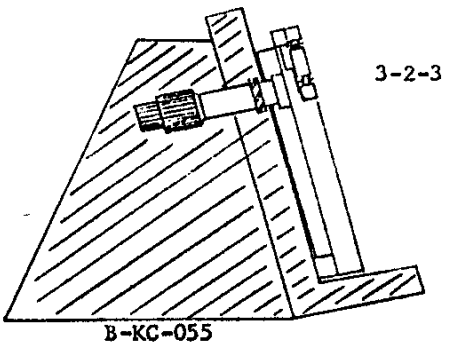

3-2-3

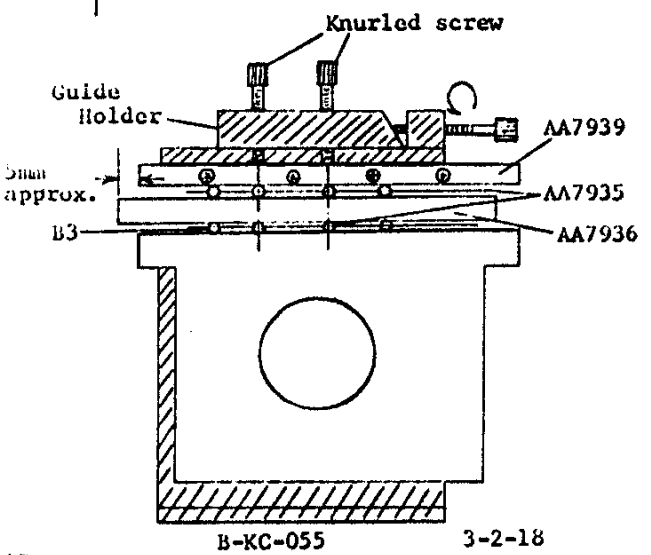

3-2-18

3-2-19 Place Casing in a position so that knurled screws come in the center. Upper and Lower Casings are aligned with each other.

3-2-20 Rotate East-West Drive Control Knob to activate Feed Plate so that it stops at Stop Screw. Be careful that Casing will hit against screws if this stopping position is not proper.

3-2-21 To correct the stopping position, loosen knurled screws, and adjust the position. (Repeat this adjustment until it is completed.)

3-2-22 Loosely clamp knurled screws to adjust the tension of East-West Drive Control Knob.

3-2-23 After tension adjustment, clamp Guide AA7939 (four CUK2.6x7).

3-2-24 After re-checking play, creak, friction, irregularity, etc. of the drive controls, cement screws.

Tool: Shellac

3-2-25 Attach Scale AA7940.

3-2-26 Make sure that there is no friction between East-West Guide and Vernier AA7941.

3-3 Adjustment of North-South Drive Control Guides

The North-South drive control adjustment requires the East-West drive control adjustment, although the latter does not require the former.

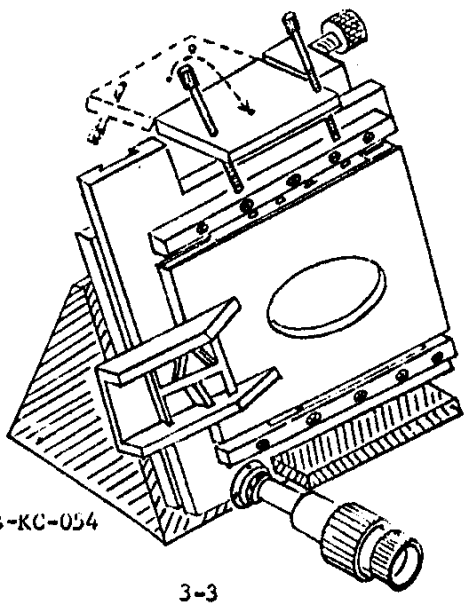

B-KC-054

3-3

3-3-1	Remove Guide AA7944 (refer to 3-2-1-8).	
3-3-2	Clean each part.	
3-3-3	Check scratches, dents, bends, etc. on the abrasive surfaces of wires, balls and other parts. Replace any defective parts.	Tool: B-KC-054
3-3-4	Grease and assemble each part.	
3-3-5	Place the stage on the support frame B-KC-054.	
3-3-6	Mount Casing and put Balls on the Guide AA7944 attached to the stage AA7935.	
3-3-7	Attach Lower Stage AA7943.	
3-3-8	Mount Casing and insert Balls.	
3-3-9	Assemble Guide AA7944, allowing slight play.	
3-3-10	Set up the Guide Holder of the support frame B-KC-054 and clamp with knurled screws.	
3-3-11	Loosely clamp Guide with knurled screws so that Balls come just below knurled screws.	
3-3-12	Determine the position of Casing so that it comes to the center of Guide AA7944.	
3-3-13	Adjust the tension of Lower Stage, tightening knurled screws of Guide Holder B-KC-054.	Check any friction, play, irregularity, creak, by sliding lower Stage. Be sure that balls are just below screws when screws are clamped.
3-3-14	Clamp Guide (AA7944). Start clamping from two screws CUK2.6x7 in the center, then to other screws, checking the tension and feed conditions. Cement each screw.	
3-3-15	Remove the assembly from the support frame B-KC-054.	
3-3-16	Attach Graduated Plate AA7947.	Make sure that there is no friction between Scale Plate and Vernier. The position "0" on vernier should overrun both ends of scale 0-50.
4	Adjustment and Replacement of Other Parts	
3-4-1	Replacement of North-South Drive Control Rack AA7946.	

3-4-1-1 Loosely clamp Rack in a position that Pinion comes to the center of Rack.

3-4-1-2 Pressing Rack to Pinion with fingers, clamp it.

3-4-1-3 Holding Knob, try to move Lower Stage in north-south direction so that you can easily find play, if any.

3-4-1-4 After check of stage movement, clamp screws CUK2.6x6.

3-4-1-5 Re-clamp it after one day or a half day after first clamping.

3-4-2 Replacement of East-West Drive Control Rack AA7942.

3-4-2-1 Remove Rack Clamping Screws CUK2.6x5 as illustrated in picture right.

3-4-2-2 Pull out Rack and replace.

3-4-2-3 Loosely clamp a replacement rack.

3-4-2-4 Holding Knob, try to move Feed Plate so that you can easily find play, if any.

3-4-2-5 If there is play, press Rack to Pinion, and loosely clamp screws again.

3-4-2-6 Repeat steps 3-4-2-3 through 3-4-2-5 until replacement rack is adjusted.

3-4-2-7 If it is difficult to adjust Rack by the steps above, follow Steps 3-2-1 for "adjustment of East-West Drive Control".

3-4-2-8 Clamp screws after adjustment.

3-4-2-9 Make sure of smooth movement of Rack and Pinion.

3-4-3 Adjustment of Stage Clamp

3-4-3-1 Remove North-South Drive Control Rack AA7946.

3-4-3-2 Remove Pin-face Screw AA0044.

3-4-3-3 Remove Lever AA7960.

3-4-3-4 Clamp Screw AA7959 with tweezers or pliers.

The crown washer should be attached as shown below:

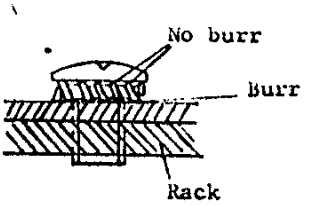

3-4-1-1

Standard tension at the knob: 80 - 350gcm

Step (3-4-1-5) is necessary if the entire rack is made of plastic, but it is not necessary if only the rack teeth are made of plastic, and other part is metallic.

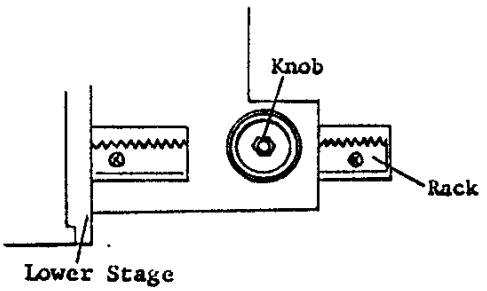

3-4-2-1

Tools: Tweezers or pliers

3-4-3-5 Attach Lever and ascertain that it is within a range of 60° as shown right. If the lever is out of the range, replace it with another lever of different hole type.

3-4-3-6 If it is still impossible to adjust by changing levers, use Washer AA1245 of different thickness.

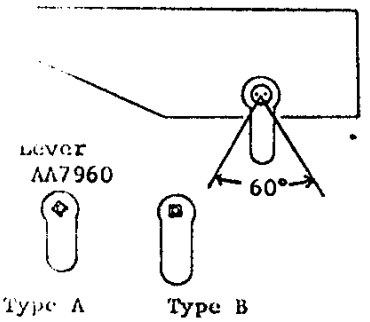

3-4-3-5

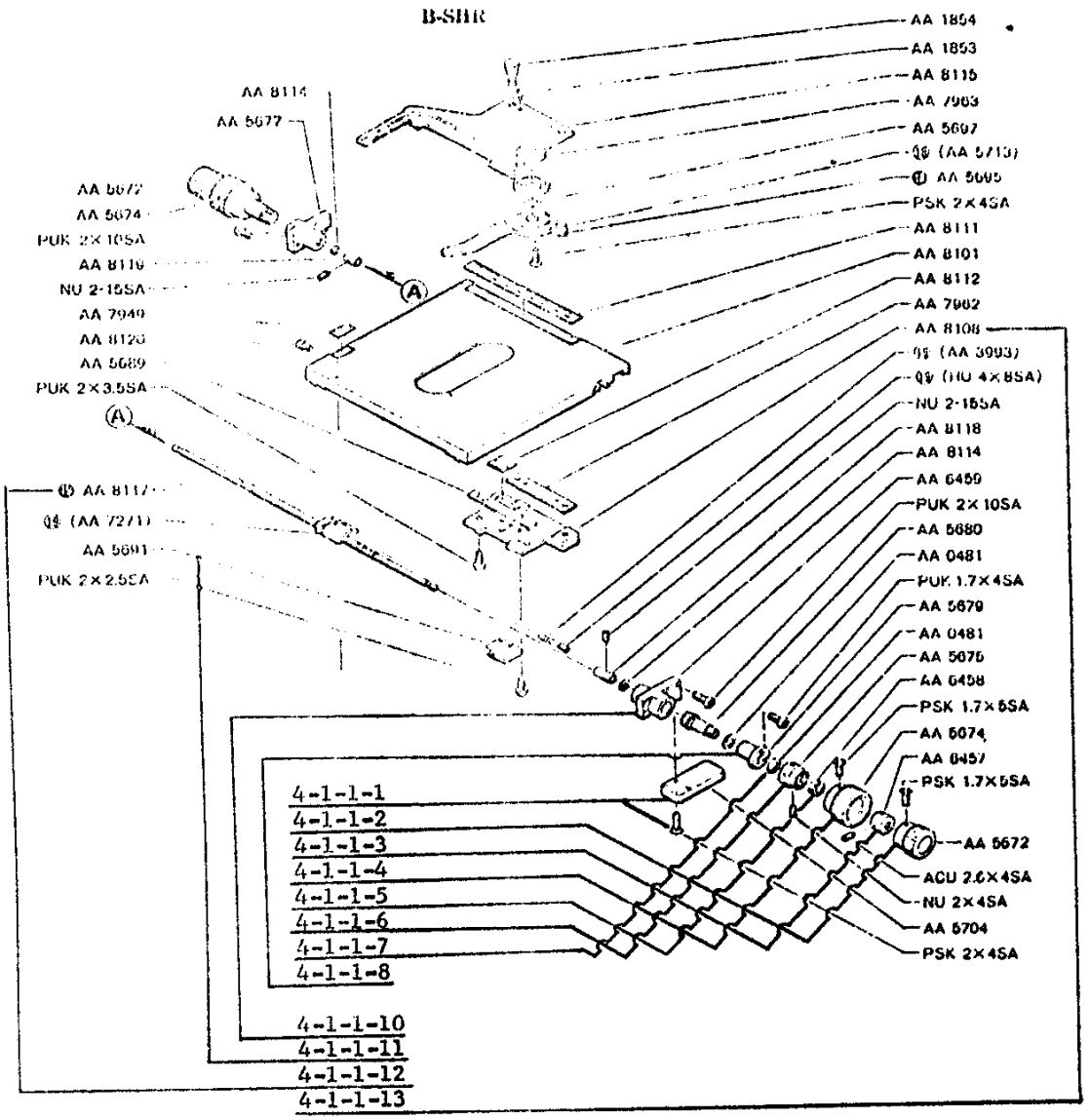
B-SHR
AA 1854
AA 1853
AA 8115
AA 7903
AA 5697
(AA 5713)
AA 5695
PSK 2×4SA
AA 8111
AA 8101
AA 8112
AA 7902
AA 8108
(AA 3993)
(NU 4×8SA)
NU 2-15SA
AA 8118
AA 8114
AA 6459
PUK 2×10SA
AA 5680
AA 0481
PUK 1.7×4SA
AA 5679
AA 0481
AA 5675
AA 6458
PSK 1.7×5SA
AA 5674
AA 6457
PSK 1.7×5SA
AA 5672
ACU 2.6×4SA
NU 2×4SA
AA 5704
PSK 2×4SA
AA 8114
AA 5677
AA 5672
AA 5674
PUK 2×10SA
AA 8116
NU 2-15SA
AA 7949
AA 8120
AA 5689
PUK 2×3.5SA
AA 8117
(AA 7271)
AA 5691
PUK 2×2.5SA
4-1-1-1
4-1-1-2
4-1-1-3
4-1-1-4
4-1-1-5
4-1-1-6
4-1-1-7
4-1-1-8
4-1-1-10
4-1-1-11
4-1-1-12
4-1-1-13

4. Stage with Horizontal Drive Controls B-SHK

4-1 East-West Drive Control

4-1-1 Adjustment and replacement of Leadscrew and Dovetail for such troubles as tension, irregularity, friction, creak, play, dust, etc.

4-1-1-1 Remove Cover AA5706 (two PSK2x4) on both sides.

4-1-1-2 Remove Drive Control Knob AA5672 (three PSK1.7x5) on both sides.

4-1-1-3 Remove Inner Bushing AA6457 (three ACU2.6x4) from each.

4-1-1-4 Remove Drive Control Knob AA5674 (three PSK1.7x5) on one side.

4-1-1-5 Remove Nut AA6458 from one side.

4-1-1-6 Remove Inner Bushing AA5675 (three NU2x4) from one side.

4-1-1-7 Remove Washer AA0481 from one side.

4-1-1-8 Remove Bearing AA5679 (three PUK1.7x4) from one side.

4-1-1-9 Remove Vertical Rack AA8106 (three PUK2x5) from one side.

4-1-1-10 Remove Bearing AA6459 (four PUK2x10) from one side.

4-1-1-11 Remove Spring AA5691 (four PUK2x2.5).

4-1-1-12 Pull out Leadscrew AA8117 with Feed Nut AA7271.

It makes easier to pull out Leadscrew if Feed Nut is positioned in the opposite side from the pulling direction. Take care not to bend Leadscrew.

4-1-1-13 Pull out Dovetail AA8108.

4-1-1-14 Clean Leadscrew and Dovetail.

4-1-1-15 After cleaning, apply grease.

Grease: **E-1 to Leadscrew;**
E-1 or E-3 to Dovetail

4-1-1-16 Check movements of Leadscrew.

Pay attention to friction, creak, play, etc.

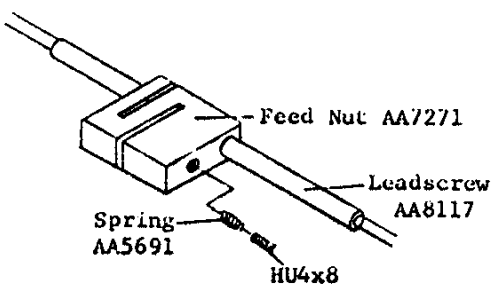

4-1-1-16

4-1-1-17 If there are still creak, irregularities, etc., adjust HU screw built in Feed Nut.

4-1-1-18 If HU screw is not effective enough, lap with gasoline or xylene.

4-1-1-19 Grease Dovetail and attach it to AA8108, then check its movement.

4-1-1-20 If Dovetail is worn out and plays excessively, adjust in the following steps:

(a) Remove Dovetail AA5689 from AA8108.
(b) Sandpaper AA5689 as illustrated.
(c) Assemble AA5689 and AA8108, and test their movements.
(d) Repeat Steps above until adjustment is complete.
(e) If AA5689 is sandpapered excessively, insert tin foil between AA5689 and 8108.

Tool: Shellac or Araldite

Completely remove gasoline or xylene after lapping.

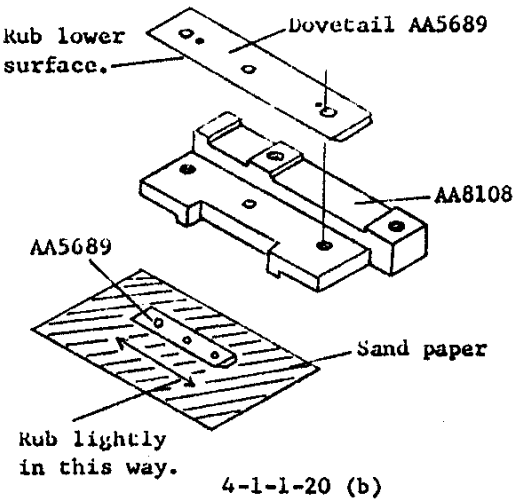

4-1-1-20 (b)

4-1-1-21 After adjusting Leadscrew and Dovetail, attach Leaf Spring AA5691 (five PUK2x2.5).

4-1-1-22 Attach Bearing AA6459.

4-1-1-23 Attach Knob, Inner Busing, etc.

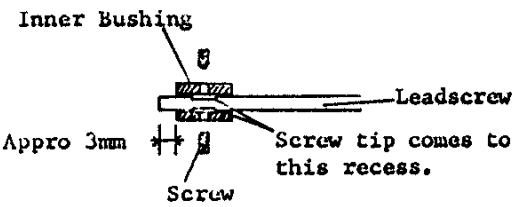

Recommended to project the tip of Leadscrew by about 3mm from Inner Bushing and clamp.

4-1-1-23

4-1-1-24 Check the movement of the assembly.

Never bend or scratch Dovetails, Leadscrew, etc.
Completely clean parts after lapping; otherwise metallic remnants will cause friction, abrasion, etc.

4-1-1-25 After attaching Rack, check play or friction with pinion.

4-1-1-26 Attach Cover AA5704.

4-1-2 Adjustment of Play in East-West Control Drive

Play in East-West Control Drive is often caused by incorrect position of Nut AA8118 or Spacer AA8119.

4-1-2

4-1-2-1 Loosen Setscrews of Spacer AA8119.

4-1-2-2 Rotate Spacer, by inserting a screwdriver into a hole in Spacer to move Spacer toward Bearing.

To make this step easier, turn the stage upside down, and insert Vertical Guide so that Leadscrew can be seen. Then, loosening four screws in Nut which is positioned at the right side of Leadscrew, rotate Nut by pushing small holes with a small screwdriver.

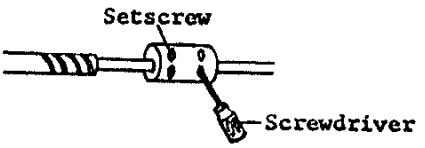

4-1-2-2

4-1-2-3 Clamp Spacer with screws after complete adjustment.

4-1-3 Adjustment of play in East-West Control Drive
This trouble may be sometimes caused by worn-out Leadscrew or grease slum.

4-1-3-1 Beside the procedure described in Steps 4-1-1-1 through 4-1-1-26 for "Disassembly and Adjustment of the B-SHR", it is simplified as follows:

4-1-3-2 Turn Stage upside down and rotate Drive Control Knob AA5674 to move Upper Stage until Leadscrew is visible as illustrated left.

4-1-3-3 Adjust play of East-West movement by means of HU4x8 Screw in Feed Nut AA7271.

4-1-3-4 If Feed Nut creaks while moving, HU Screw is tightened excessively. Loosen it a little.

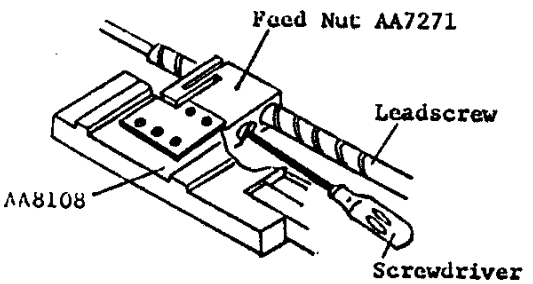

4-1-3-2

4-1-4 Adjustment of North-South and East-West Control Drive Knobs if they rotate together with each other.

This trouble may be caused by bent Screw AA8117, defective attachment or position of Bearing, Inner Bushing and East-West Control Drive Knobs.

4-1-4-1 Remove East-West Control Knob AA5672 and Inner Bushing AA6457 for checking.

4-1-4-2 If there is still a same defect, adjust the attachment position of Bearing AA6459.

4-1-4-3 Check the attachment of Inner Bushing.

4-1-4-4 Check the attachment of East-West Control Drive Knob.

4-1-4-5 If defective parts have been found in steps above, replace them.

4-2 Adjustment of North-South Drive Controls B-SHR

4-2-1 Adjustment of Ball Bearing

4-2-1-1 Remove Graduated Plate AA8104 (five 3PUK2x5).

Be careful that plate is cemented to screws, etc.

4-2-1-2 Remove Rack AA8106 (three PUK2x5) from both sides.

4-2-1-3 Remove Cover AA5704 (two PSK2x4) from both sides.

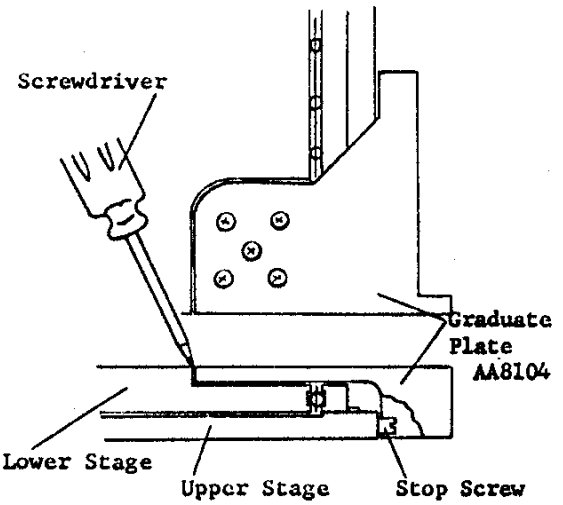

4-2-1-1

Recommended to pry open with a screwdriver in direction of arrows than to remove the graduated plate in direction of thick arrow, since the graduated plate may be broken by Stop Screw.

4-2-1-4	Place Upper Stage AA8101 and Lower Stage AA8102 on jig B-KC-053 and B-KU-033.	Tool: B-KC-053, B-KU-033
4-2-1-5	Remove Vertical Guide AA8107 (three CUK2.6x8)	1) Be careful that this guide is cemented with screws. 2) Only one side of Guide should be removed because the other side must be left in the standard position.
4-2-1-6	Remove Casing AA7938 and Balls.	
4-2-1-7	Remove Lower Stage AA8102.	
4-2-1-8	Take out Casing and Balls.	
4-2-1-9	Clean removed parts.	
4-2-1-10	Check removed parts espacially wires and balls. If they are defective, replace them.	
4-2-1-11	Check the straightness and burrs of replacement wires.	
4-2-1-12	Grease each part and assemble.	Grease: E-1
4-2-1-13	Clamp Guide AA8107, allowing it play.	
4-2-1-14	Hold Guide AA8107 with Guide Holder of the support frame B-KC-053 lightly in a manner that balls come under Guide Holder.	
4-2-1-15	Move Lower Stage to the right and left to see it moves smoothly, and affix Guide when there is no friction, irregularity, or play.	
4-2-1-16	Affix Guide and three CUK2.6x8 with a small amount of shellac.	Tool: Shellac or Araldite.

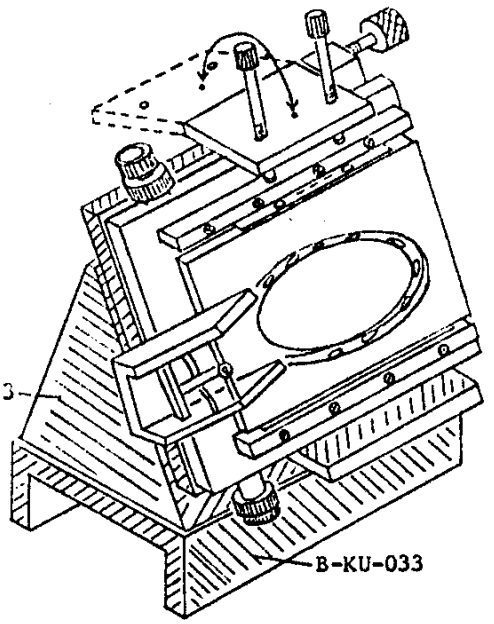

4-2-1-4

4-2-1-17 Attach Rack in a manner that Rack connects with Pinion correctly.

4-2-1-18 If Rack plays, adjust it with Washer AA8116.

4-2-1-19 Check movements of Rack so that it has no friction, irregularity, etc.

4-2-1-20 Attach Graduated Plate.

The distance between Graduated Plate and Vernier should be less than 0.1mm.

4-2-1-21 Check the operation of the entire assembly.

4-2-2 Adjustment of North-South Drive Control

4-2-2-1 Remove Knob AA5672 (three PUK1.7x5).

4-2-2-2 Remove Inner Bushing AA6457 (three ACU2.6x4).

4-2-2-3 Remove Knob AA5674 (three PSK1.7x5).

4-2-2-4 Remove Rack AA8106 (three PUK2x5).

4-2-2-5 Remove Bearing AA6459.

4-2-2-6 Mount Bearing AA6459 to the jig B-KU-031.

Tool: B-KU-031

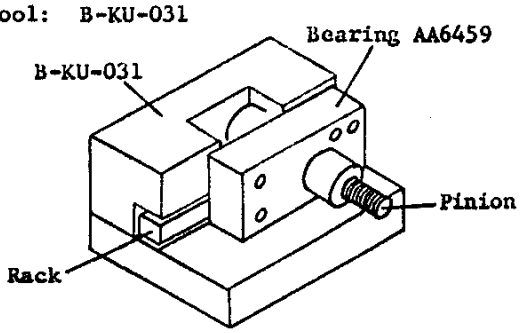

4-2-2-6

4-2-2-7 Loosen Nut AA6458 by pushing it with screwdriver.

4-2-2-8 Remove Inner Bushing AA5675.

4-2-2-9 Remove Bearing AA5679 with Pinion AA5680.

4-2-2-10 Clean each part, and check defective parts, burrs, friction, etc.

4-2-2-11 Grease (E-4) each part and assemble them by means of the jig B-KU-031.

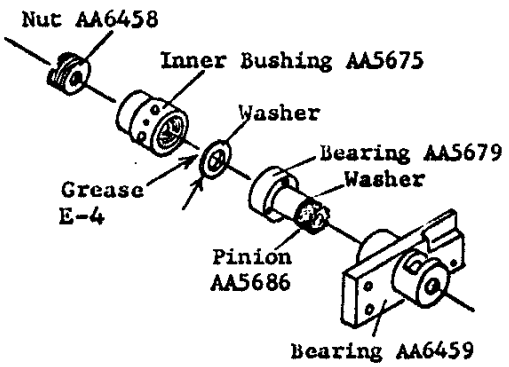

4-2-2-7

4-2-2-12 Connect Pinion to Bearing AA5679.

4-2-2-13 Attach Bearing AA5679 to Bearing AA6459.

4-2-2-14 Attach Inner Bushing AA5675 lightly.

4-2-2-15 Attach Nut AA6458.

4-2-2-16 Check play of Inner Bushing and Nut on the thrust side.

4-2-2-17 Clamp three screws NU2x4 of Inner Bushing and apply shellac.

4-2-2-18 Apply shellac to Nut.

4-2-2-19 After the assembly is completed, remove the assembly from the jigs, and mount it on the stage.

4-2-2-20 Attach North-South Drive Control Knob.

4-2-2-21 Attach Vertical Rack and check its function.

4-2-2-22 Assemble Inner East-West Drive Control Knob and East-West Drive Control Knob.

4-2-2-23 Check the function of the entire assembly.

4-3 Adjustment of Stage Rotation

4-3-1 Creak, irregularity, tension, etc. during stage rotation are often caused by grease slum, stains, dirt and dust, etc.

4-3-1-1 Unscrew only one Dovetail AA8109.

It makes very difficult to obtain a rotation center if you unscrew more than one Dovetail.

4-3-1-2 Bring Stage Mount AA8103 to the unscrewed Dovetail side as close as possible, and lift the Stage Mount edge slightly so that it can be easily removed.

4-3-1-3 Clean Lower Stage and Stage Mount.

4-3-1-4 Check their abrasive surfaces, and repair them with a scraper, if any scratching.

Be careful not to make it worse by scraping.

4-3-1-5 Apply grease E-1 to abrasive surfaces and assemble parts.

Grease: E-1

4-3-1-6 After assembly of Stage Mount to Lower Stage, attach Dovetail.

Be very careful not to damage parts at assembly, for assembly requires more skill than disassembly.
Re-assemble unscrewed Dovetail, pressing Stage Mount to the other two Dovetails with force, so that Stage Mount has no play after assembly.

4-3-1-7 Check stage rotation.

4-3-1-8 Shellac set screws of Dovetails after completing adjustment.

5. Lubrication List

Place			Grease
Stand	(1)	Gear box	E-6
	(2)	Bearing	E-3
	(3)	Pre-focusing lever	
	(4)	Focusing knobs	
	(5)	Fine focus guide	E-5
		Fine focus guide grooves	
		Fine focus ball guides	
	(6)	High/low magnification selector	E-1
	(7)	Pinions	E-6
		Bearings	
Condenser	(8)	Centering screws	E-3
	(9)	Dovetails	
		Pinions	
	(10)	Springs	E-1
		Spindle springs	
		Sleeves	

Place			Grease
Binocular and trinocular tubes	(11)	Helicoid	E-1
		Connecting lever	
	(12)	Sliding dovetail	
	(13)	Light path selector lever mount	
Stage	(14)	Stage clips	E-10
		Rotation dovetail	
		Circular dovetail	E-1
		Clamping screws (stand)	
	(15)	North-south drive guide	E-4
	(16)	East-west drive guide	
	(17)	Leadscrews	E-1
	(18)	Focus knobs	E-4

Lubrication Diagram

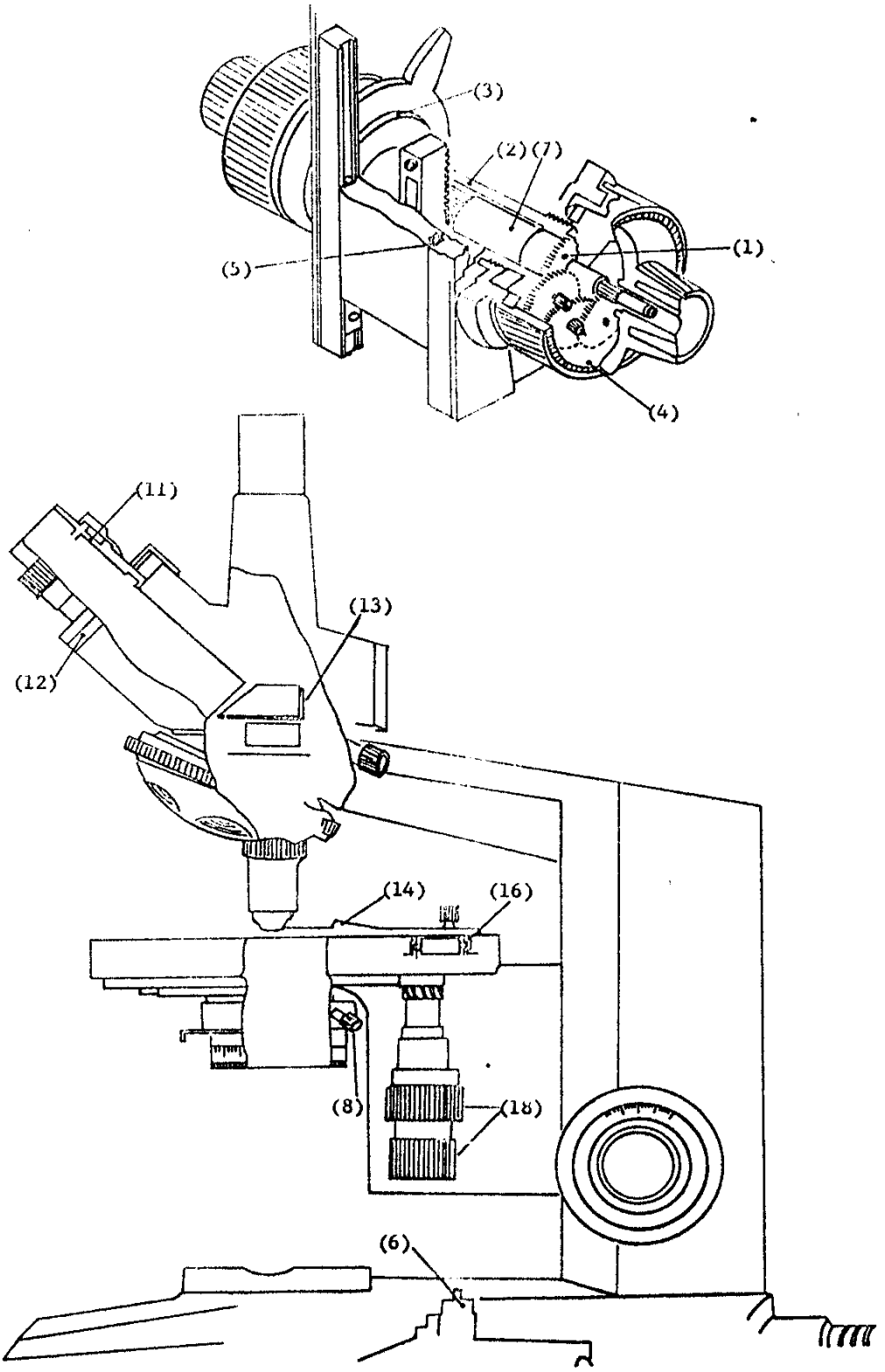

OT 0001 #1 screwdrivers set Jewelers screwdrivers &

↓

5

6. List of Repair Tools and Jigs for All Olympus Microscopes

A. Regular Tools

OT 0011	Set of screwdrivers (6 pcs.)
OT 0015	Phillips screwdriver (medium size)
OT 0017	Screwdriver (small size)
OT 0018	Screwdriver (large size)
OT 0021	Adjustable spanner (round tip)
OT 0022	Adjustable spanner (flat tip)
OT 0023	Handle of small size phillips screwdriver, using OT 0027
OT 0027	Phillips screwdriver tip, using OT 0023
OT 0035	Tweezers (special made)
OT 0061	Sharp point pliers (size 150mm)
OT 0079	Pliers (size 160mm)
OT 0216	Set of allen wrenches (8 pcs.)
OT 0317	Thickness gauge
OT 0423	Blower
OT 0501	Solution container
OT 0551	Lens paper (300mm x 80mm 500 pcs.)
OT 0552	Lens paper (150mm x 60mm 500 pcs.)
OT0304	10X magnifier ~~for~~ Lupe for focusing of camera
A-14	KK-ACU 0.85 Allen wrench with handle (size 0.85)
A-15	KK-ACU 1.25 " " " " (size 1.25)
A-16	KK-ACU 1.5 " " " " (size 1.5)
A-17	KK-ACU 2.5 " " " " (size 2.5)
A-18	KK-ACU 3.0 " " " " (size 3.0)
A-19	KK-ACU 4.0 " " " " (size 4.0)
A-20	KK-ACU 5.0 " " " " (size 5.0)

OT0422 — scraper 0433 Feather

B. Special Tools

KKAA0008	Pin face wrench for coarse adjustment knob (AA000800) (Model GB, E, EHT, MG, PME, SZ, X, VT-II and MF)
KKAA0055	Pin face wrench for fine adjustment knob (AA005500) (Model GB, E, EHT, MG, PME and POM)
KKAA0075	Pin face wrench for condenser knob (AA007500) (Model GB, E, F, EHT, FHT and POM)
KKAA0077	Pin face wrench for tension adjustment ring (AA007700) (Model GB, E, F, EHT, FHT and POM)
KKAA1456	Pair of pin face wrench for coarse adjustment knob (AA1456((Model F, FHA, FHT, PHOTOMAX and VANOX)
KKAA1466	Pair of pin face wrench for fine adjustment knob (AA146600) (Model F, FHA, FHT, PHOTOMAX and VANOX)
KK-ACH-OB	Screwdriver for achromat objective lens
KK-PL-OB	Screwdriver for plan objective lens

Pin Type needle nose pliers

OT So

OT1141 Tip for phillips screwdriver

CATALOG
7-C172 FT $93
Focus magnifier PM-FT

B8 - KC-2001 Taper reamer for coarse adjustment knob (Model GB, E, EHT, PME, SZ, X, VT-II, MF and POM)

B9 Taper reamer for coarse adjustment knob (Model K, F, FHT, PHOTOMAX and VANOX)

B10 Holder for taper reamer

KC-2003

KC-2004 - WASHER CUTTER - Complete HANDLE And everything

C. Test Equipments and Jigs for Optical Alignment

C-1 10x eyepiece with cross hair

C-2 $49 G10x eyepiece with cross hair for stereo microscope 2-5492

C-3 KN0004 Test plate for Bi and Tr tube alignment (1/100mm square)

C-4 Test plate for objective alignment

C-5 $99 KN0003 Test plate for stereo microscope alignment (5/100mm concentric) — C-5

C-6 KN0001 JIS Test plate No. 1 for checking resolving power of low power objective (4x - 20x) KN0010 (Anyone)

C-7 KN0002 40x. 100x JIS Test plate No. 2 for checking resolving power of high power objective (40x - 100x) KN0011 (Anyone)

C-9 KN-021 Centering objective for optical alignment of observation tube

C-10 KN-022 Centered objective

C-11 KN-023 Gauge for checking stage tilt alignment

C-13 KN-025 Standard objective for optical tube length alignment (only use for BH)

C-14 Jig for Binocular and Trinocular tube alignment for E/F series
Type A: For Old type Binocular or Trinocular tube
Type B: For New type " " " "
Type C: For Old type " " " "
Type D: For New type " " " "
Jigs, Type A and B must be used with model GB
Jigs, Type C and D must be used with model E/F series

C-15 Focusing magnifier (PM-FT)

Biological

D. For BH Microscopes Only KN0005 centering objective 1/100 square Already built in instead of

D-3 B-KN-005 Standard revolving nosepiece

D-4 B-KN-006 Standard jig for mechanical tube length control

D-5 B-KN-007 Standard cross hair stage plate for optical axis alignment of stage

D-6 B-KN-008 Standard stage for stage tilt alignment

D-7 B-KN-009 G10x eyepiece with cross hair for alignment of BH-SWTR

D-8 B-KN-011 Jig for interpupillary distance at 62mm of BH-Bi or BH-Tr

D-9 B-KN-012 Same as B-KN-011, but for BH-SWTR

D-11 B-KN-030 Jig for tension adjustment of pinion (AA7951) of BH-SV

D-12 B-KU-031 Jig for assembling pinion (AA5680) of BH-SHR

D-13 B-KU-032 Support frame for assembling coarse and fine adjustment

D-14 B-KU-033 Support frame for assembling ball guide of coarse and fine adjustment

KN 0026 Focusing glass For 35MM Frosted glass

3-C451. (BH-PT) PHOTO Tube $36

For BHC

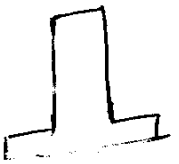

2-P790 CT-4 without

Centering Telescope $49

KN0029 with enumerated

CROSS HAIRS.

~~$~~ M-0662- Threaded Adapter M.E.T

D-15	B-KU-034	Support frame for adjusting H/L illuminator lenses and mirror (LP-614) in base
D-16	B-KU-035	Jig for checking smoothness of ball guide of fine and coarse adjustment
D-17	B-KC-040	Jig for assembling circular dovetail (AA7887) to prism housing of BH-SWTR
D-18	B-KC-041	Jig for assembling circular dovetail (AA7887) to prism housing of BH-Bi or BH-Tr
D-19	B-KC-042	Jig for aligning H/L illuminator lenses and mirror using B-KC-043
D-20	B-KC-043	Same as above, using B-KC-042
D-21	B-KC-048	Alignment jig for P2 prism (LP0602, 0607, 0709, 06
D-24	B-KC-053	Support frame for assembling BH-SHR
D-25	B-KC-054	" " " " BH-SV
D-26	B-KC-055	" " " " "
D-27	B-KC-056	Positioning jig for dovetail (AA7860) to condenser holder (AA7895)
D-28	B-KK-070	Pin face wrench for nut (AA8130) of H/L handle
D-29	B-KK-071	Pin face wrench for nut (AA7828) of fine adjustmen
D-30	B-KK-072	Box wrench for stop screw (AA7959) of stage mount
D-31	B-KK-073	Pin face wrench for nut (AA6458) of BH-SHR
D-32	B-KK-077	Hexagon wrench for nut (6N3) of BH-SV
D-33	B-KK-078	Wrench for pinion bearing (AA7950) of BH-SV (hexagon type)

E. Grease (Applications)

$8.75

E-1 1160 ELD	Dovetail general Heavier than 72515 Leadscrew (stage) Helicoid (observation tube) Ball guides (stage) H/L magnification selector
E-2	Dovetail in general (where light force is required) Dovetail of AH-Bi (interpupillary distance)
E-3 1160 C	Dovetail in general (in case slightly heavier movement is required) Pre-focusing knob, centering screw, pinion shaft
E-4 72515	X, Y drive guide and drive control shaft (stage) - Ball Bearing
E-5	Fine focusing ball guides
E-6 pino	BH fine focusing gear and bearing
E-7 4047	AH coarse focusing dovetail Large dovetails Heavier than E1
E-8	Fine adjustment shaft (E, GB, MF, POM etc.)
E-9	AH fine focusing gear and bearing
E-10	Specimen holder

E-11 or 33 SZIII

SKN0004 - Simple Type Gauge for checking TILT on STAGE

S-0250 protective cap for SZIII $38

Tin Foil

SK 0875 .02 mm $ 5.15

SK 0876 .03 mm $ 8.40

SK 0877 .05 mm $ 12.00

SUPPLEMENT: Illustrations of Tools and Jigs

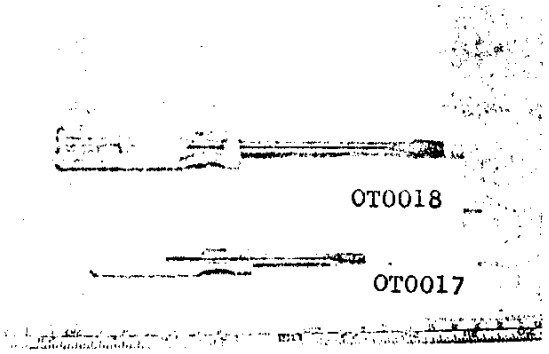

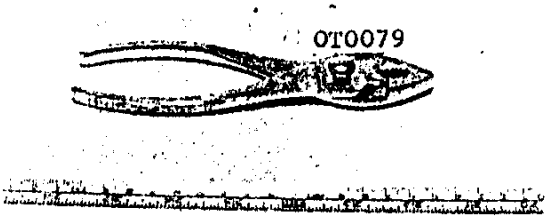

OT0011

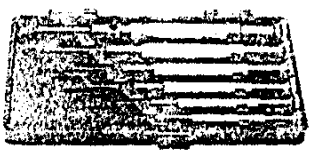

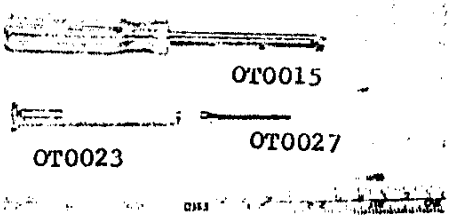

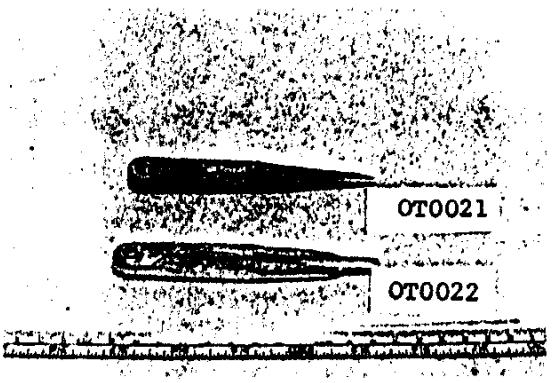

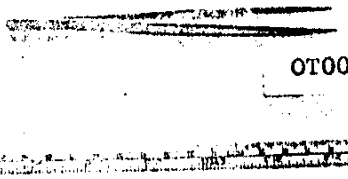

OT0035

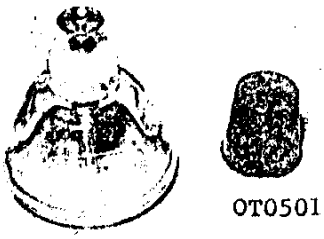

OT0501

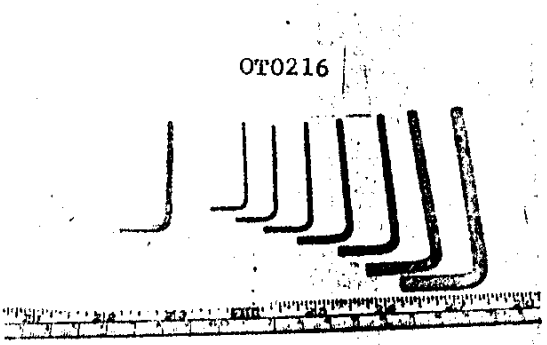

OT0216

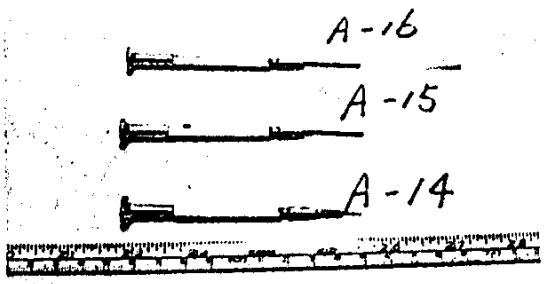

A-16

A-15

A-14

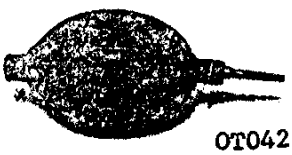

OT0423

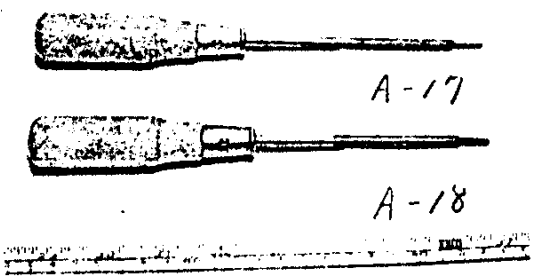

A-17

A-18

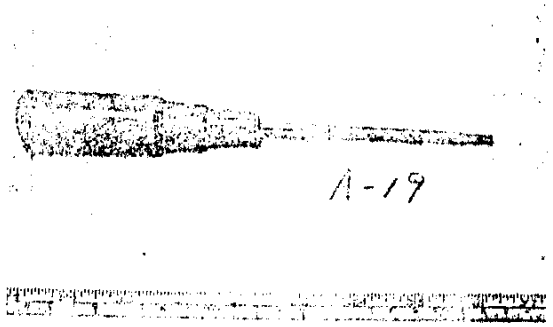
A-19

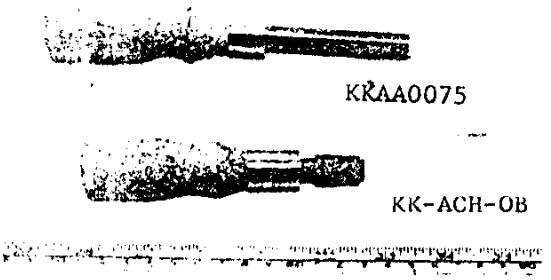
KKAA0075
KK-ACH-OB

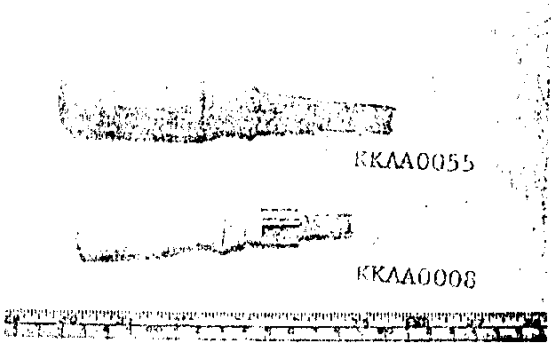
KKAA0055
KKAA0008

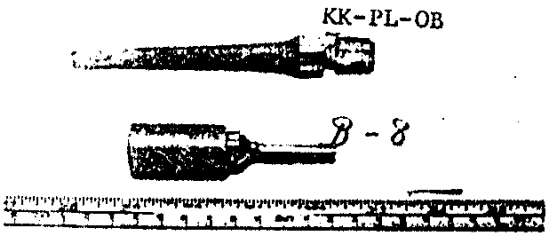
KK-PL-OB
B-8

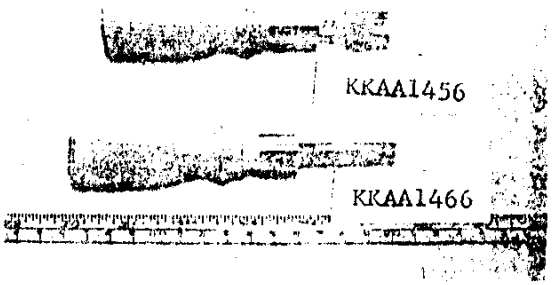
KKAA1456
KKAA1466

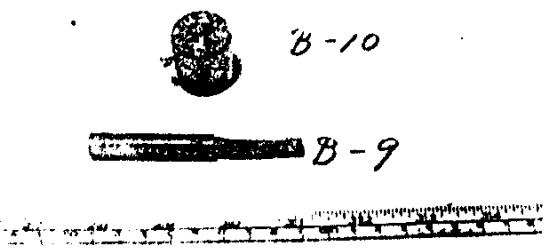
B-10
B-9

C-1

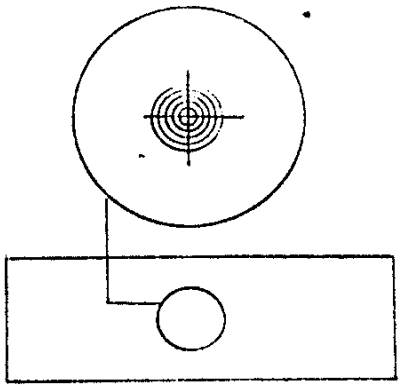

C-5

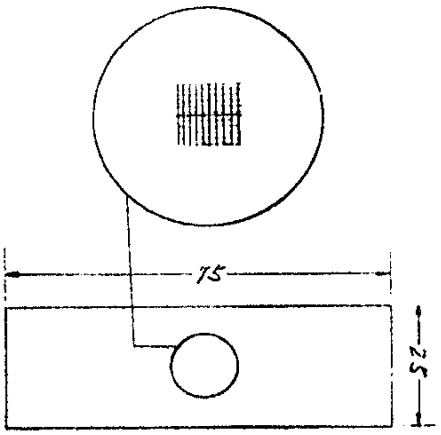

C-3

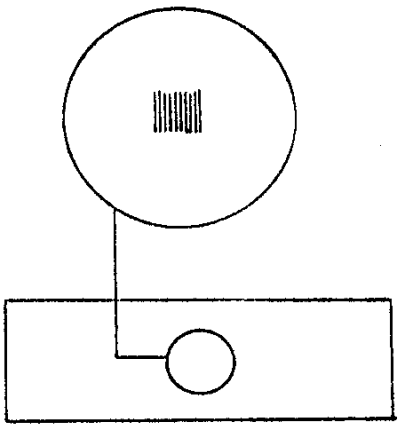

C-6

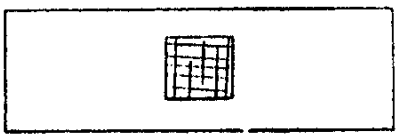

C-4

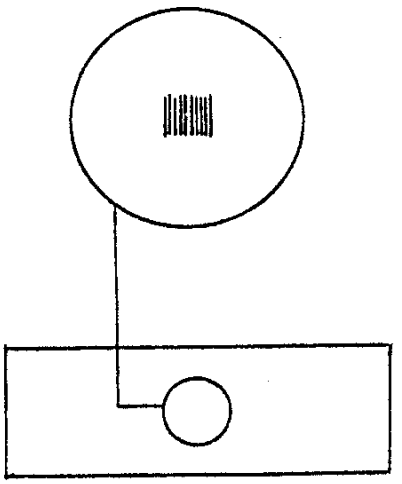

C-7

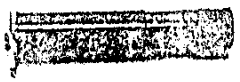

C-8

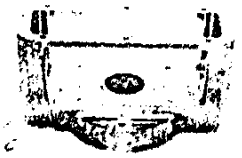

See BH Repair manual item 2-2-26 on page 39.

C-9

C-11

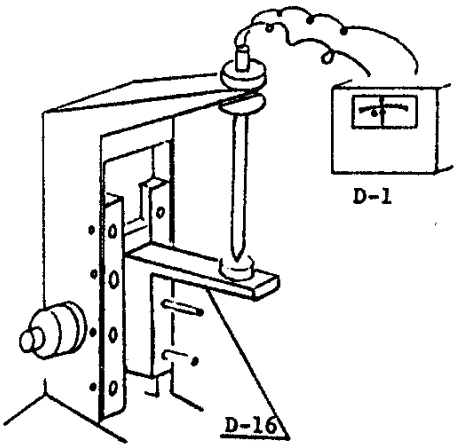

C-9: See BH Repair manual item 2-2-4-2 on page 34.
C-11: See BH Repair manual item 1-3-1-2 on page 14.

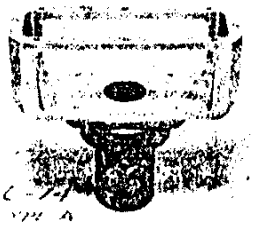

C-7 TYPE A

D-3

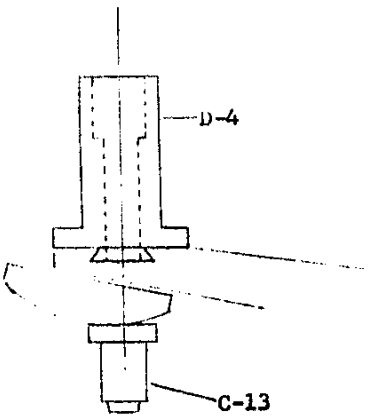

See BH Repair manual item
1-3-1-3 on page 14.

See BH
4-2-2-

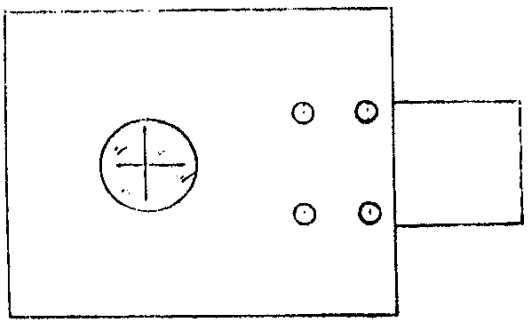

D-5

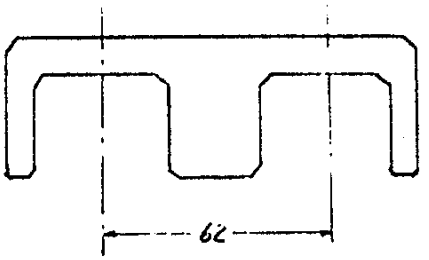

D-8

See
1-1-

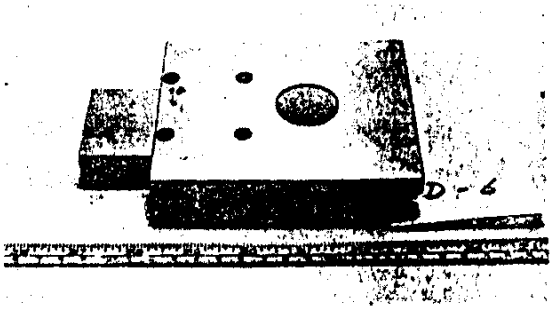

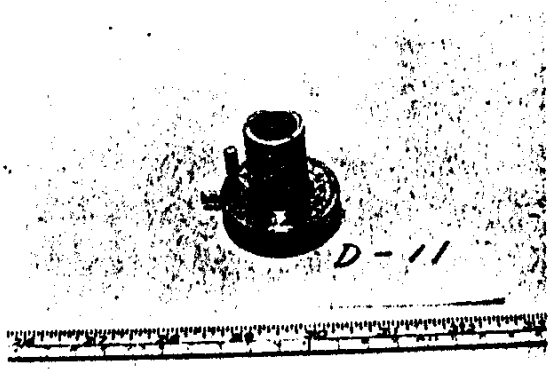

See BH Repair manual item
3-1-2-2 on page 43.

See
1-1-

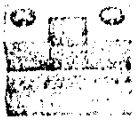

D-12

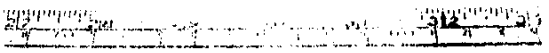

See BH Repair manual item
4-2-2-6 on page 58.

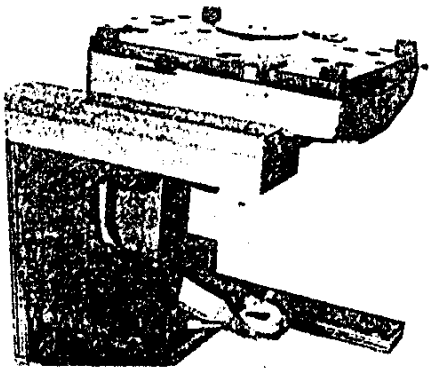

See BH Repair manual item
1-6-1 on page 22.

D-15

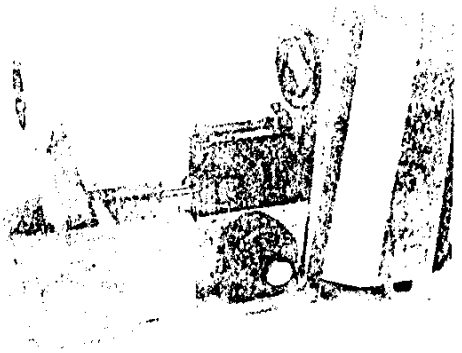

See BH Repair manual item
1-1-12 on page 9.

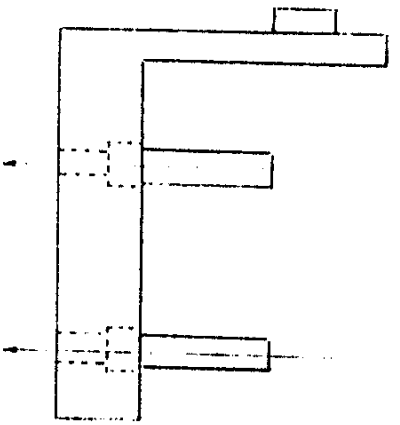

D-16

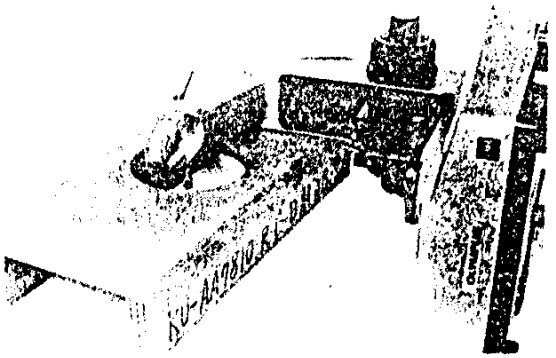

See BH Repair manual item
1-1-7-4 on page 7.

D-18

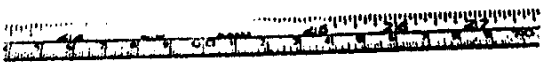

See BH Repair manual item
2-2-1-1 on page 34.

See BH Repair manual item
1-7-9-1 on page 25.

See BH Repair manual item
1-7-9-1 on page 25.

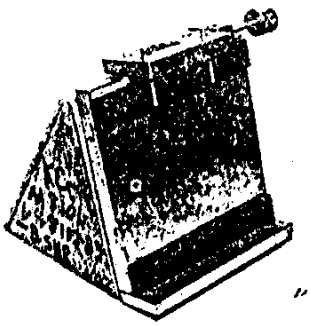

See BH Repair manual item
4-2-1-4 on page 57.

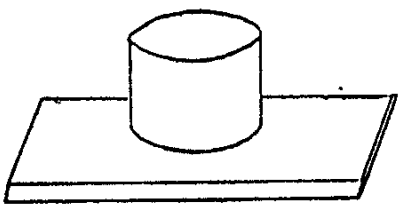

D-21

See BH Repair manual item
2-2-4-4 on page 35.

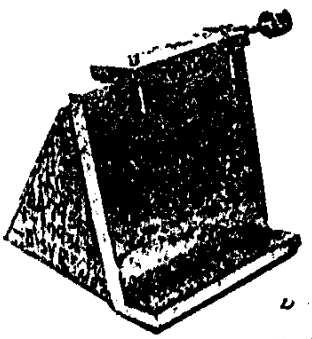

See BH Repair manual item
3-2-3 on page 47.

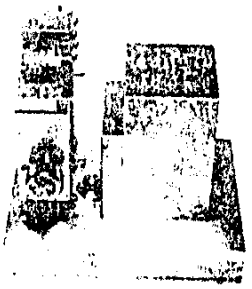

See BH Repair manual item 1-4-3-6 on page 18.

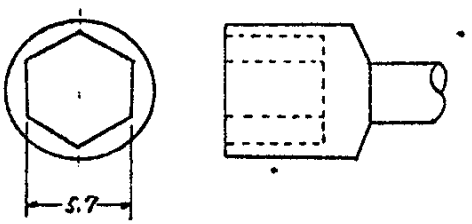

D-32

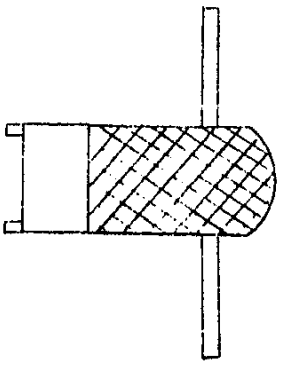

D-28

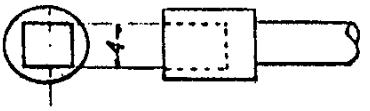

D-30

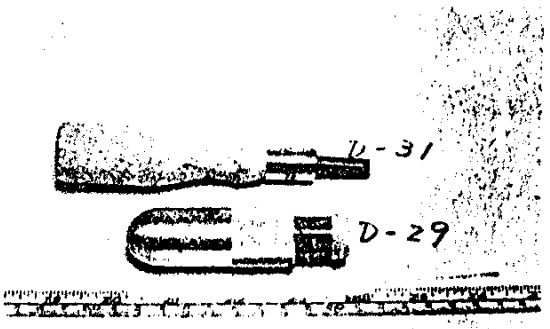

D-29: See BH Repair manual item 1-1-4-3 on page 7.

D-31: See BH Repair manual item 4-2-2-6 on page 58.